8361/8461

TRUCTION MANU

8361/8461 SERIES DIGITAL PANEL METERS

CALICO

CALIFORNIA INSTRUMENTS COMPANY
a division of AIKEN INDUSTRIES, INC.

3511 MIDWAY DRIVE / SAN DIEGO, CA 92110 714-224-3241 CABLE: CALICO SANDIEGO

CALIFORNIA INSTRUMENT CORPORATION
3511 Midway Drive
San Diego, California 92110

May, 1970
4th Printing
CALICO

INSTRUCTION MANUAL

8361/8461 SERIES DIGITAL PANEL METERS

8461-3

Figure 1

OFFICIAL RECORDS STATION
FILE COPY
FACILITIES FEB 6 1973

LIST OF ILLUSTRATIONS

FIGURE		PAGE
1	MODEL 8361/8461 (GENERAL)	Frontispiece
2	BLOCK DIAGRAM	7
3	INTERNAL WAVE FORMS	8
4	TRUTH TABLE	13

LIST OF DRAWINGS

REF. DES.	NUMBER	TITLE
A1	8350-070	MASTER BOARD SCHEMATIC
A2	8350-074	DECADE BOARD SCHEMATIC
A3	8350-075	OVERRANGE BOARD SCHEMATIC
A4	8350-073	POLARITY BOARD SCHEMATIC
A5	8350-072	LOGIC BOARD SCHEMATIC
A6	8350-076	ANALOG BOARD SCHEMATIC
A7	8350-071	ATTENUATOR BOARD SCHEMATIC
A1	8350-705	MASTER PRINTED CIRCUIT BOARD ASSEMBLY
A2	8350-700	DECADE PRINTED CIRCUIT BOARD
A3	8350-701	OVERRANGE PRINTED CIRCUIT BOARD ASSEMBLY
A4	8350-702	POLARITY PRINTED CIRCUIT BOARD ASSEMBLY
A5	8350-703	DIGITAL PRINTED CIRCUIT BOARD ASSEMBLY
A6	8350-704	ANALOG PRINTED CIRCUIT BOARD ASSEMBLY
A7	8350-706	ATTENUATOR PRINTED CIRCUIT BOARD ASSEMBLY

TABLE OF CONTENTS

GENERAL DESCRIPTION

1.1 INTRODUCTION 1

1.2 DESCRIPTION 1

1.3 EQUIPMENT SUPPLIED 1

INSTALLATION AND OPERATION

2.1 UNPACKING 1

2.2 MECHANICAL INSTALLATION 1

2.3 CONNECTOR WIRING 2

2.4 ACCEPTANCE TEST PROCEDURE 3

THEORY OF OPERATION

3.1 GENERAL 6

3.2 DETAILED CIRCUIT DESCRIPTION 9

3.2.1 TIME BASE GENERATOR 9

3.2.2 INPUT AMPLIFIER 10

3.2.3 OPTIONAL INPUT FILTER 10

3.2.4 INPUT ATTENUATOR 10

3.2.5 RAMP GENERATOR 11

3.2.6 COMPARATORS 12

3.2.7 DUAL EXCLUSVIE OR GATE 12

3.2.8 2 MHz CRYSTAL OSCILLATOR 14

3.2.9 DECADE BOARD 14

3.2.10 OVERRANGE 15

3.2.11 POLARITY BOARD 17

TABLE OF CONTENTS

3.2.12 POWER SUPPLY 17

3.3 PRINT OUTPUTS 18

CALIBRATION AND TEST PROCEDURE

4.1 CALIBRATION PROCEDURE 20

4.2 TEST PROCEDURE 21

4.2.1 AC COMMON MODE REJECTION 21

4.2.2 DC COMMON MODE REJECTION 22

4.2.3 INPUT IMPEDANCE 23

4.2.4 TEMPERATURE COEFFICIENT 23

4.2.5 TIME STABILITY 23

4.2.6 RESOLUTION 24

4.2.7 INPUT OVERLOAD 24

4.2.8 LINE VOLTAGE RANGE 24

4.2.9 INPUT FILTER 24

4.2.10 READING RATE 26

MAINTENANCE AND TROUBLE SHOOTING

5.1 GENERAL MAINTENANCE 27

5.2 TROUBLESHOOTING 27

CIRCUIT DIAGRAMS

6.1 GENERAL 28

6.2 REFERENCE DESIGNATIONS 28

TABLE OF CONTENTS

REPLACEABLE PARTS

7.1 GENERAL 29

7.2 ORDERING INFORMATION 29

PARTS LIST

APPENDIX

A CODE LIST OF MANUFACTURERS

WORK SHEET

SERIAL NUMBER(S) 1591

RESOLUTION

One Part In:	999	1999	9999	12000	OTHER
		✓			

FULL SCALE INPUT VOLTAGE OF 19.99 = READING OF 19.99

POLARITY BOARD ✓ Yes ___ No

FILTER CIRCUIT ___ Yes ✓ No

FIXED DECIMAL 19.99

PROGRAMMABLE DECIMAL: PIN F. _____

PIN H. _____

SPECIFICATIONS

DIGITAL PANEL METERS

	MODEL 8461	MODEL 8361
RANGE:		
	-2 0 to ± 1.999 volts DC	-3 0 to 12.000 volts DC
	-3 0 to ± 19.99 volts DC	-4 0 to 120.00 volts DC
	-4 0 to ± 199.9 volts DC	-5 0 to 1200.0 volts DC
	-5 0 to ± 1000 volts DC	
ACCURACY: (at 25°C after 15 minute warm-up)		
	± 0.1% of reading and ± 0.05% of full scale	± 0.01% of reading and ± 0.008% of full scale
RESOLUTION:		
	0.05% of full scale	0.008% of full scale
STABILITY:		
	± 0.1% of full scale for 30 days at 25°C	± 0.01% of full scale for 30 days at 25°C
TEMPERATURE COEFFICIENT:		
	± 0.025% of reading/°C and ± 0.005% of full scale/°C	± 0.0025% of reading/°C and ± 0.001 % of full scale/°C
LINE VOLTAGE COEFFICIENT:		
	± 0.005% of full scale per volt of line change	± 0.0015% of full scale per volt of line change
INPUT IMPEDANCE:		
	100 MΩ (NOMINAL) range 2 10 MΩ (NOMINAL) ranges 3, 4, and 5	100 MΩ (NOMINAL) range 3 10 MΩ (NOMINAL) ranges 4 and 5

COMMON SPECIFICATIONS

COMMON MODE REJECTION: (based on 1 Mv sensitivity)	100 db at DC, 60 db at 60 Hz
SAFE INPUT OVERLOAD:	1000% of full scale but not to exceed 1200 volts DC
DIGITIZING TIME:	180 MS maximum
READING RATE:	Five readings per second nominal
INPUT FILTER SETTLING TIME:	Less than 1 second
AMBIENT TEMPERATURE RANGE:	0 to 50°C
POLARITY:	Fully automatic with negative polarity indicator.
INPUT POWER:	115 ± 10 volts or 230 ± 20 volts
SIZE:	3 5/8" w. x 2 1/8" h. x 5 1/4" d. (not including printed circuit connector)
WEIGHT:	20 ounces

All specifications are tested in accordance with standard Calico test procedures.

GENERAL DESCRIPTION

1.1 INTRODUCTION

This instruction manual contains information on the installation, operation, calibration and maintenance of the CALICO 8361/8461 Series Digital Panel Meters. A detailed theory of operation is included as an aid to maintenance personnel.

1.2 DESCRIPTION

The CALICO 8361/8461 Series Digital Panel Meters are a family of precision digital DC voltmeters. They provide BCD outputs and "READ and HOLD" for use in systems applications.

1.3 EQUIPMENT SUPPLIED

The unit is shipped with an instruction manual and a panel mounting bracket.

INSTALLATION AND OPERATION

2.1 UNPACKING

The panel meter is shipped in a cardboard shipping container with a protective inner packing. DO NOT DESTROY the packing container until the unit has been inspected for possible damage in shipment.

2.2 MECHANICAL INSTALLATION

The CALICO 8361/8461 Digital Panel Meter is designed to mount in a rectangular panel opening 2.156 inches high by 3.700 inches wide.

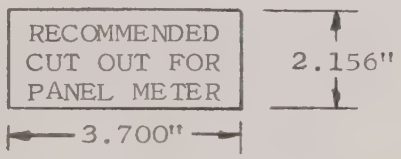

The unit inserts through the panel opening and the mounting bracket, screws to the unit from behind the panel, thus leaving no mounting hardware visable from the front panel.

2.3 CONNECTOR WIRING

The mating connector is a Winchester Part Number KM31SC. In order to perform the acceptance test procedure, only the input circuitry and AC line power need be wired to the digital panel meter. For system applications it is also necessary to connect the BCD outputs and external READ and HOLD circuitry.

CAUTION

Never plug the digital panel meter in or out of the mating connector with AC power applied to the mating connector as damage to the printed circuit board may occur.

2.3.1 115 VOLT AC LINE OPERATION

The following procedure should be followed when wiring the mating connector so that the digital panel meter operates from the 115 volt AC line.

a) Connect Pin A to Pin B.
b) Connect Pin D to Pin E.
c) Connect Pins A and B to the high side of the line voltage through a 100 MA slow-blow fuse and a S.P.S.T. toggle switch.
d) Connect Pins D and E to the low side of the AC line voltage.

2.3.2 230 VOLT AC LINE OPERATION

The following procedure should be followed when wiring the mating connector so that the digital panel meter operates from the 230 volt AC line:

a) Connect Pin B to Pin D.
b) Connect Pin A to the high side of the 230 volt line in series with a 50 milliampere slow-blow fuse and a S.P.S.T. toggle switch.
c) Connect Pin E. to the low side of the AC line.

2.3.3 SIGNAL INPUT WIRING

Connect the high side of the input signal to PIN J of the mating connector. Connect the low side of the input signal to Pin K. If the input signal leads are very long, or if the noise levels are extremely high, it is desirable to use a single conductor shielded wire for the high input. The shield of the shielded wire should be used for the low input lead.

2.3.4 BCD OUTPUT LEVELS

All output voltages are generated with respect to ground (Pin K). The ground return for these outputs should be connected to Pin K. The table in Section 2.3.5 lists the pin allocations required for the mating connector.

NOTE

For the specific characteristics of these output voltages, their purpose and use, see section 3.3 "PRINT OUTPUTS" under Theory of Operation.

2.3.5 PIN ALLOCATIONS (See Table 1 , Page 4)

2.4 ACCEPTANCE TEST PROCEDURE

Inspect the unit for any possible shipping damage immediately upon receipt. If any damage is evident, notify the carrier. Do not return the instrument to the factory without prior approval. If the unit appears to be in good condition, perform the following:

After wiring the signal input (Section 2.3.3) and the AC line power (Section 2.3.1), the unit may be tested in accordance with the following:

a) Connect a wattmeter between the AC power input to the digital panel meter and the AC line. Turn the unit on and check that the power does not exceed 8.0 watts. Allow 15 minutes for the digital panel meter to warm-up. Check that the

CALIFORNIA INSTRUMENTS CORPORATION

PIN ALLOCATION

8361/8461		8361	8461	OTHER
A.	115 VAC HI	L. UNIT'S "4"	----	
B.		M. UNIT'S "8"	----	
C.	-KEY-	N. UNIT'S "2"	----	
D.	115 VAC LO	P. UNIT'S "1"	----	
E.		R. TEN'S "4"	UNIT'S "4"	
J.	INPUT HI	S. TEN'S "8"	UNIT'S "8"	
K.	GND	T. TEN'S "2"	UNIT'S "2"	
c.	TIME BASE OUTPUT	U. TEN'S "1"	UNIT'S "1"	
d.	ENCODE INPUT	V. HUNDRED'S "1"	TEN'S "1"	
e.	PRINT OUTPUT	W. HUNDRED'S "2"	TEN'S "2"	
f.	ANALOG OUTPUT	X. HUNDRED'S "4"	TEN'S "4"	
k.	POLARITY	Y. HUNDRED'S "8"	TEN'S "8"	
		Z. THOUSAND'S "1"	HUNDRED'S "1"	
		a. THOUSAND'S "2"	HUNDRED'S "2"	
		b. THOUSAND'S "8"	HUNDRED'S "8"	
		h. THOUSAND'S "4"	HUNDRED'S "4"	
		j. TEN THOUSAND'S "1"	THOUSAND'S "1"	
		F.		
		H.		

TABLE 1

CONNECTOR NO. KM31SC
WINCHESTER

digital panel meter indicates zero volts with the signal input leads shorted together. Adjust the front panel ZERO control, if required.

b) Turn to the second page of this instruction manual and determine from the WORK SHEET the full scale factor for this digital panel meter.

c) Apply a known positive polarity DC voltage at approximately 95% of full scale and check that the display reads the voltage within ± 2 digits. If the unit does not read the known voltage to this accuracy, and the known voltage is accurate to ± 0.005 per cent, the unit may be adjusted by use of the 'CALIB. control located on the front panel.

d) Apply a negative polarity DC voltage at approximately 95 per cent of full scale and check that the display indicates the voltage within ± 2 digits.

THEORY OF OPERATION

3.1 GENERAL

The CALICO 8361/8461 Series Digital Panel Meters are single ramp type digital voltmeters. A block diagram, which illustrates the theory of operation, is shown in Figure 2. The input signal is applied to an amplifier with a gain of +1.0 which provides a high input impedance to the panel meter. This input amplifier is also used as an active filter.

The voltage ramp is reset to approximately +15 volts at the start of each conversion sequence as shown in Figure 3. The negative slope of this precision ramp is determined by stable passive components and the semi-infinite gain of an operational integrator.

This precision voltage ramp drives the inverting inputs of two differential comparators. The non-inverting input to one comparator is driven by the unknown input signal through the gain of one amplifier. The non-inverting input of the remaining comparator is grounded. Figure 3 illustrates the timing sequence for a -10 volt input signal.

The output of these comparators drive a dual exclusive or gate which generates a pulse-width modulated signal. The width of this pulse-width modulated signal is proportional to the amplitude of the input signal.

This pulse-width modulated signal is used to gate a crystal controlled clock. The resulting pulse train is fed into a digital counter to produce a numerical representation equivalent to the analog input. This number is transferred into a digital storage register upon receipt of a load register pulse. The output of this register drives a set of decoder drivers which in turn drive a set of nixie tubes.

The polarity of the input signal is determined by the outputs of the two comparators. If the signal comparator is activated first, then the polarity of the input signal is positive. If the zero comparator is activated first, then the polarity of the input signal is negative.

The time base generator is used to determine the timing sequence throughout the digital panel meter.

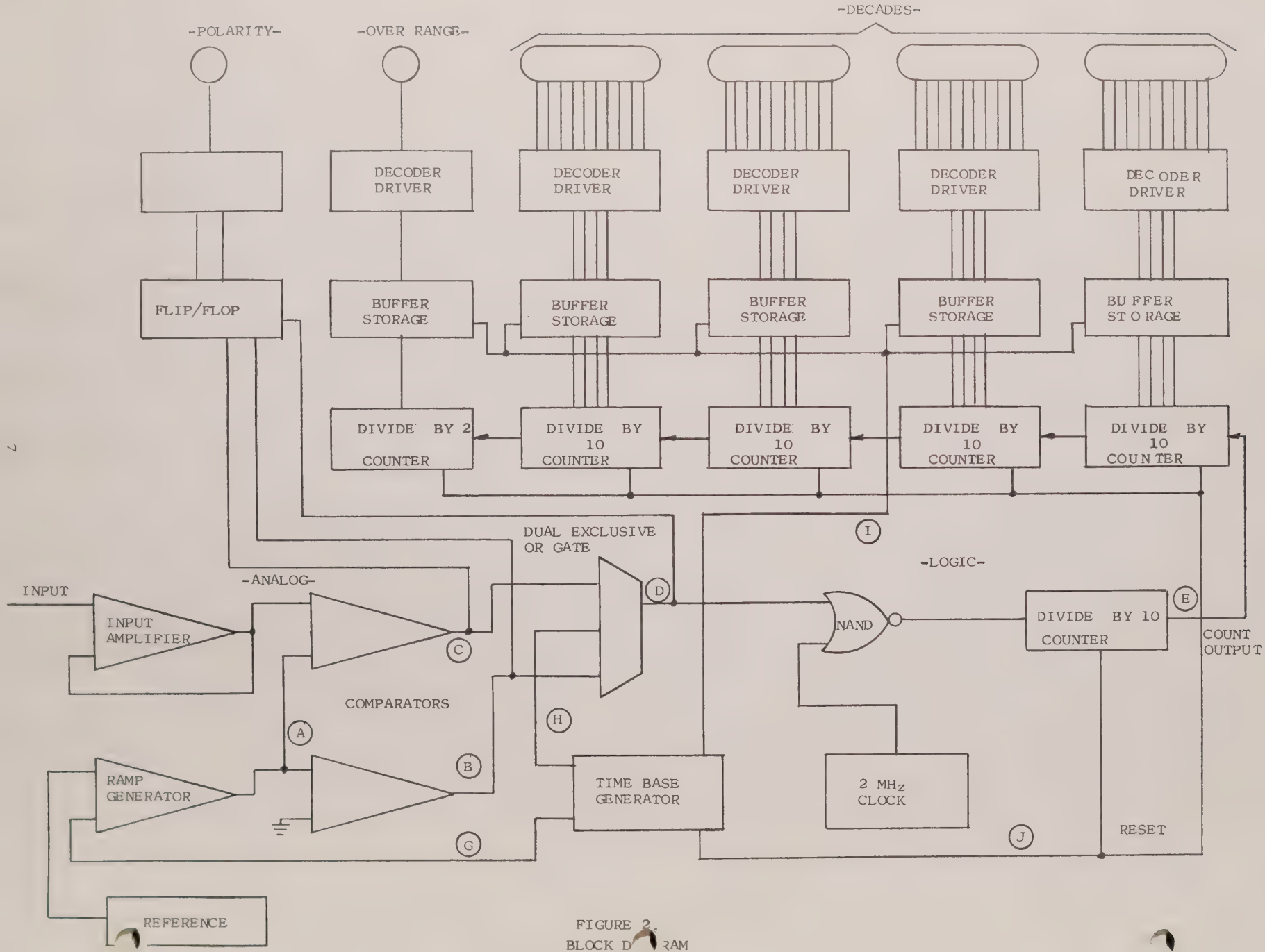

FIGURE 2.
BLOCK D[illegible]RAM

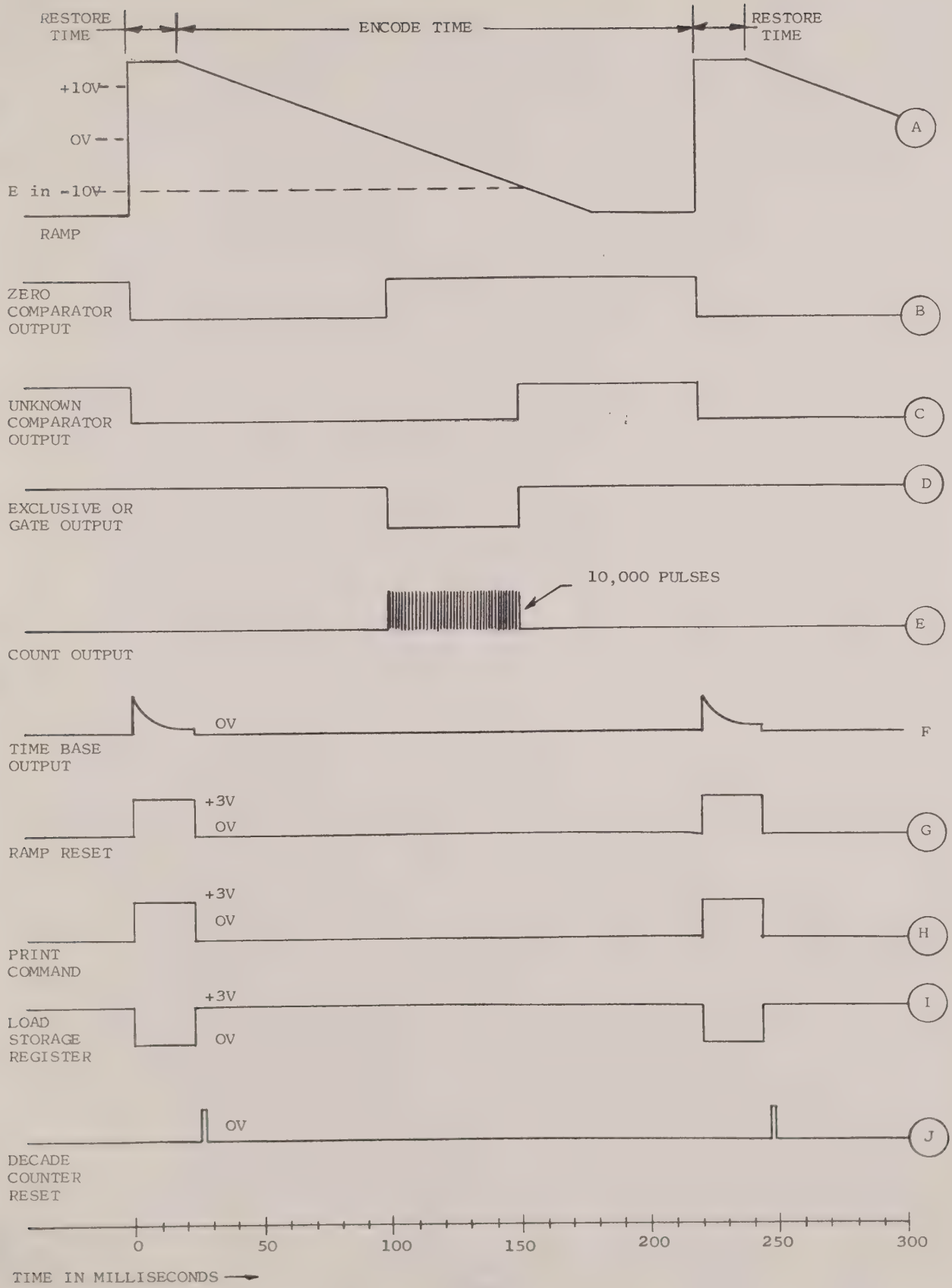

FIGURE 3.

INTERNAL WAVEFORMS

3.2 DETAILED CIRCUIT DESCRIPTION

3.2.1 TIME BASE GENERATOR

The time base generator consists of a unijunction transistor oscillator and associate wave shaping circuits located on the A5 assembly. A schematic diagram for this circuitry is shown on drawing D 8350-072 and consists of transistor A5Q1, integrated circuit A5 IC3, and associated components.

The unijunction oscillator generates a non-symmetrical output which is used to divide the machine timing into two intervals, a restore time period and an encode time period. The charging time of the unijunction oscillator, which determines the encode time period of the machine, is set by A5R1 and A5C1 and is approximately 200 milliseconds. The discharge time of the unijunction oscillator, which determines the restore time period of the machine is set by A5R7 and A4C1 and is approximately 15 milliseconds. If A5 remote timing is required, the jumper from Pin 5 to Pin 6 must be removed and an external timing source should be applied to Pin 6 of the A5 assembly.

The output of the unijunction oscillator is applied to A5IC-3 Pin 14 where it is converted to a rectangular pulse by two successive invertors. The positive going, or leading edge, of this pulse is used to reset the ramp to approximately +15 volts. This signal is available at A5IC-3 Pin 3 and is illustrated in Figure 3, wave form G. The print command output is generated at A5IC-3 Pin 2 and is illustrated in Figure 3, wave form H. The load storage register signal is generated at A5IC-3 Pin 5 and is illustrated in Figure 3, waveform I.

The decade counter reset pulse is generated at A5IC-3 Pin 7 and is illustrated in Figure 3 wave form J. This pulse is approximately 0.1 microsecond behind the positive going edge of the load register pulse. The decade counter reset pulse is approximately 1 millisecond wide and is used to reset the decade counters back to zero.

3.2.2 INPUT AMPLIFIER

The input amplifier is a direct coupled potentiometric amplifier located on the A6 assembly. A schematic diagram for this amplifier is shown on drawing D8350-076 and consists of A6Q1, A6IC1 and associated components.

Transistor A6Q1 is a dual transistor used as a differential emitter follower and is used to provide a high input impedance. This emitter follower drives a high gain integrated circuit amplifier, A6IC1. The output of A6IC1 is returned to the inverting input of A6Q1 through a 1 megohm resistor A6R1. This feedback loop reduces the closed loop gain of the input amplifier to exactly + 1.00.

Capacitors A6C4 and A6C7, along with A6R12 and A6R18, form a two pole active low pass filter which reduces the amplitude of high frequency noise which may be present on the input signal. This filter has a settling time of less than 100 milliseconds and provides 15 to 20 db normal mode rejection at 60 Hz. The rejection increases at 12 db per octive for frequencies above 60 Hz.

3.2.3 OPTIONAL INPUT FILTER

The optional input filter is a tuned notch filter located on the A6 assembly. A schematic diagram for this filter is shown on drawing D8350-076 and consists of resistors A6R13, A6R14, A6R21 and capacitors A6C5, A6C8, and A6C9.

This notch filter produces a maximum rejection at or near 60 Hz and is typically 50 to 60 db. This optional filter has a settling time of less than one second when used in cascade with the active filter associated with the input amplifier.

3.2.4 INPUT ATTENUATOR

The input attenuator is only used on versions of the digital panel meter where the full scale input voltage is greater than ±12 volts, for example, the Model 8361-4 and the Model 8461-4. The input atten-

uator provides a 10 to 1 signal attenuation on the Model 8361-4 and 8461-3.

3.2.5 RAMP GENERATOR

The ramp generator is located on the A6 assembly and a schematic diagram is shown in drawing D8350-076. The ramp generator consists of A6Q2, A6IC2 and associated components.

The ramp generator is an operational integrator which converts a precision input current into a linear voltage ramp. Transistor A6Q2 is a dual transistor used in the differential emitter follower configuration to provide a high input impedance at the summing point of the operational integrator. The output of this differential emitter follower is used to drive a high gain integrated circuit amplifier, A6IC-2. The output of A6Q2 is returned to the inverting input of A6Q2 through a precision integrating capacitor.

The precision input current to the ramp generator is determined by a zener diode reference and a series resistance to the summing point. The zener diode reference consists of A6Q3, A6CR6 and associated components. Transistor A6Q3 is used as a constant source of current which drives the zener reference A6CR6. The temperature coefficient of this zener reference is matched to the temperature coefficient of the precision integrating capacitor A6C6. This is accomplished by adjusting the value of resistor A6R22.

The output of the zener diode reference is applied to the ramp generator via the front panel calibration potentiometer, A1R11.

The ramp is reset to +15 volts by means of the ramp set signal applied to the non-inverting input of A6Q2 through A6CR4 and A6R9.

3.2.6 COMPARATORS

The comparators are located on the A6 assembly and a schematic diagram is shown in drawing D8350-076. The comparators A6IC3 and A6IC4 are high gain differential amplifiers. The inverting input to each comparator is driven from the ramp output through A6R25 and A6R26. The non-inverting input to A6IC-3 is grounded through A6R15 and A6R16. The non-inverting input to A6IC4 is driven by the unknown input through A6R27 from the output of the input amplifier. Diodes A6CR2, A6CR5, A6CR7, and A6CR8 form input protection networks for the comparators.

As the ramp output becomes more negative than the non-inverting input of either comparator this comparator output drives positive. The difference in time when one comparator output is driven positive and when the other comparator output is driven positive is directly proportional to the analog input voltage.

Each comparator output drives an invertor located on the A5 assembly. These invertors A5IC1 are used to inhibit the comparator outputs during the ramp restore time interval.

3.2.7 DUAL EXCLUSIVE OR GATE

The dual exclusive or gate is located on the A5 assembly and a schematic diagram is shown in drawing D8350-072. This gate is driven from the invertors contained in integrated circuit A5IC1.

The dual exclusive or gate, A5IC2 is comprised of four dual input or gates. The purpose of this gate is to give an output only when a difference exisits between comparator outputs. The block diagram and truth table per Figure 4 illustrate how this is accomplished.

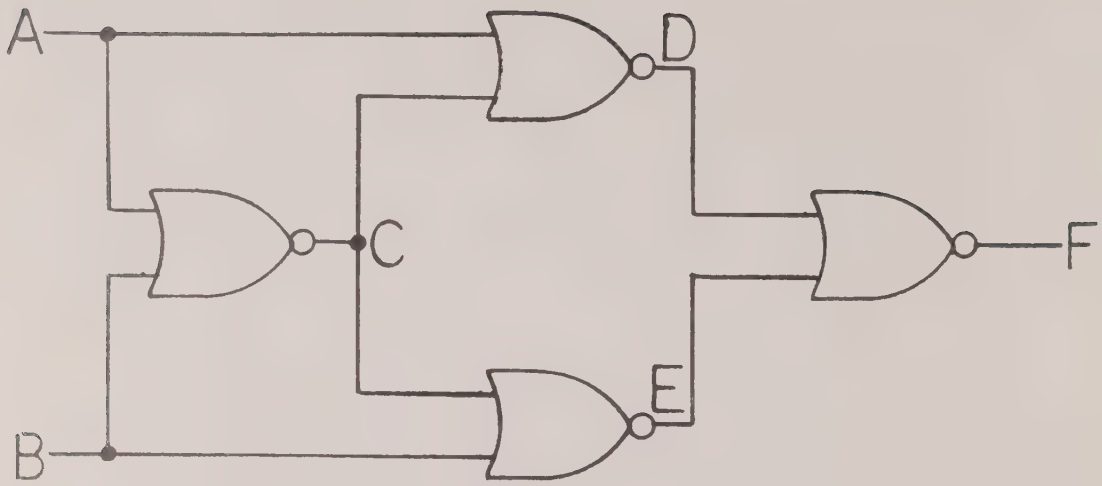

TRUTH TABLE

POSITIVE "1" STATE

A	B	C	D	E	F
0	0	1	0	0	1
1	0	0	0	1	0
0	1	0	1	0	0
1	1	0	0	0	1

THE OUTPUT AT "F" IS TRUE ONLY WHEN A DIFFERENCE EXISTS BETWEEN POINTS "A" AND "B".

FIGURE 4.
TRUTH TABLE

3.2.8 2 MHz CRYSTAL OSCILLATOR

The 2 MHz crystal oscillator is located on the A5 assembly and a schematic diagram is shown in drawing D8350-072.

The function of the crystal oscillator is to provide a precision frequency which is used to accurately measure the pulse width of the dual exclusvie or gate output.

The 2 MHz crystal oscillator consists of A5IC4, crystal A4Y1 and associated components. Resistors A5R4 and A5R5 provide a DC bias current to the two stage integrated circuit oscillator. The crystal is placed in the positive feedback loop of the oscillator.

The output of the 2 MHz oscillator is gated with the output of the dual exclusive or gate and provides a 2 MHz pulse train at Pin 5 of A5IC4.

This 2 MHz pulse train drives a divide by ten integrated circuit counter, A5IC5. The resulting 200 KHz pulse train output, at Pin 8 of A5IC5, is used to drive the decade counters.

3.2.9 DECADE BOARD

Each decade board is defined as an A2 assembly and contains an integrated circuit counter, storage register, decoder-driver, and nixie display tube. A schematic diagram for the decade board is show in drawing D8350-074. Four of these boards are used in the 8361 Series Digital Panel Meters and three of these boards are used in the 8461 Series Digital Panel Meters.

The 200 KHz pulse train is applied to the decade counter A2IC-3 in the "units" decade. The count output of the "units" decade is used to drive the count input of the "tens" decade. In like manner, the output of the "tens" decade is used to drive the input of the "hundreds" decade. The output of the "hundreds" decade is used to drive the overrange circuitry in the case of a three digit machine and four digit machine. The total count is accumulated in all the decade counters before the end of the encode time, as shown in Figure 3, wave form E.

At the start of the restore time, when the load storage register pulse goes to zero volts, the BCD number in each of the decade counters is transferred into the storage register A2IC1.

The BCD outputs of each of the storage registers activate the corresponding decoder-driver A2IC2. The ten-line output of the decoder-driver A2IC2, activates the nixie tube A2V1.

At the conclusion of the restore time period, all decade counters are reset to zero and are ready to receive new data.

3.2.10 OVERRANGE

The overrange circuitry is located on the A3 assembly and a schematic diagram is show in drawing D8350-075.

The overrange circuitry has three modes of operation. These are:

1) In the first mode, no count pulses are received from the last decade counter stage, and as a result, no visual indication occurs in the overrange indicator.

2) In the second mode, a single count pulse is received from the last decade counter, and as a result, a stable "1" indication occurs in the overrange indicator.

3) In the third mode, two or more count pulses are received from the last decade counter, and as a result, a blinking "1" indication occurs in the overrange indicator. The blinking indication occurs at a rate such that the indicator goes through one complete cycle for each cycle of the machine.

The operation of the overrange circuit can be explained as follows:

The count output of the last decade is applied to the input of a dual nor gate A3IC2 Pin 7, used as an inverter. This invertor output, A3IC2, Pin 5, is applied to the clocked input of a JK flip-flop, A3IC3 Pin 6. During the preceeding "restore" portion of the time base, the reset input, A3IC3 Pin 10, was driven positive thus forcing the output, A3IC3 Pin 9 on to its low state. Since the steering inputs, A3IC3 Pins 5 and 7, are unbiased, the next negative pulse at the clocked input,

A3IC3 Pin 6, will advance the output, A3IC3 Pin 9, to the high state.

Both outputs of this flip-flop, A3IC3 Pins 8 and 9, are used to drive the steering inputs to the next flip-flop, A3IC3 Pins 1 and 3. At the conclusion of the "encode" portion of the time base, a load storage register pulse occurs. This pulse is applied to the clocked input, A3IC3 Pin 2. Therefore, the second flip-flop stores the data gathered in the first flip-flop. The output of the second flip-flop, A3IC3 Pin 13, is applied to the input of a dual nor gate, A3IC2 Pin 9. The output of this nor gate, A3IC2 Pin 8, supplies the base drive to A3Q1, the output driver, through A3R2 in the second display mode.

In the third display mode, two or more pulses are applied to A3IC3 Pin 6, thus causing the output, A3IC-3 Pin 9, to drive first positive then negative. This is in turn used to drive the clocked input to A3IC1 Pin 6. As A3IC1 Pin 6 is driven negative, the output A3IC1 Pin 9 is returned to two steering inputs A3IC1 Pin 5 and Pin 1. The positive state at A3IC1 Pin 5 stops any further inputs at A3IC1 Pin 6 from advancing the output, A3IC1 Pin 9.

The alternate input, A3IC1 Pin 8, drives the input to a dual nor gate, A3IC2 Pin 12, used as an invertor. This output A3IC2 Pin 14, is used to drive A3Q1 through A3R1. The outputs of the third flip-flop A3IC1, Pins 8 and 9, drive the steering inputs to the fourth flip-flop A3IC1, Pins 1 and 3. Therefore, when the load storage pulse occurs and the input at A3IC1 Pin 1, is high, the output, A3IC1 Pin 14, drives positive. This output drives one input to a dual nor gate A3IC2 Pin 10. In this mode, the output of the nor gate, A3IC1 Pin 8, is forced on to its low state. Since the output at A3IC1 Pin 8 is now turning on with each count sequence and turning off with each reset pulse, the resulting drive to A31IC2 Pin 12, causes the output at A3IC2 Pin 14, to turn off and on at the same rate. The end result is a visual modulation of the "1" indication.

3.2.11 POLARITY BOARD

The polarity circuit is located on the A4 assembly and a schematic diagram is shown in drawing C8350-073.

The polarity of the input signal is determined by the differential comparators. Since the ramp has a negative slope, a positive input signal will activate the unknown comparator first. Likewise a negative input signal, will activate the zero comparator first.

The output of the dual exclusive or gate is applied to the inputs of two dual nor gates, A4IC1 Pins 6 and 9. This allows the outputs of the dual or gates IC1 Pins 8 and 5, to respond to comparator inputs only during the time the dual exclusvie or gate is in the low state. During this time the comparator that remains negative will cause a positive output at A4IC1 Pin 8 or 5. These in turn drive a direct coupled flip-flop whose outputs are A4IC1 Pins 14 and 3. The output that occurs at Pin 14 drives the negative polarity indicator, A4Q1.

3.2.12 POWER SUPPLY

The power supply circuitry is located on the A1 aseembly and a schematic diagram is shown in drawing D8350-070.

The power transformer, A1T1, has a split primary and may be operated from either 115 volts ac or 230 volts ac. (See Section 2.3.1 or 2.3.2 for mating connector wiring). Secondary number one, brown and yellow wires, connects to a full wave silicon diode bridge, A1CR1 through A1CR4. The bridge output drives two 2000 MF capacitors and provides +3.6 volts dc ± 10% with approximately .4 volt peak-to-peak ripple.

Secondary number two, green, blue and violet wires, drive a full wave silicon diode bridge, A1CR5, A1CR6, A1CR8, and A1CR10. The output of this bridge drives two 200 MF capacitors and provides +22 volts dc ± 10% with approximately 1 volt peak-to-peak ripple. These voltages are regulated to ±15 volts ±10% with a series type regulator. The plus 15 volt regulator consists of A1Q1, A1R1 and A1CR7. The minus 15 volt regulator consists of A1Q2, A1R2 and A1CR9.

The ripple on the + 15 volt supply is approximately 25 millivolts peak-to-peak at a repetition rate equal to the machine conversion rate. The ripple on the -15 volt supply is less than 5 millivolts peak-to-peak.

Secondary number three, gray and white wires, drives a full wave silicon diode bridge, A1CR11 through A1CR14. The bridge output provides +200 volts DC ± 10% into a 20 MF filter capacitor

NOTE

Ten to twenty seconds should be allowed for discharging the +200 volt supply before servicing the unit.

3.3 PRINT OUTPUTS

The print output circuitry is located on the A2 assembly and on the A5 assembly.

The BCD outputs are coded in 1248 positive "1" state. The false state has a level of 0 to +.4 volt and can sink up to 2 milliamperes. The true state has a level of +3.6 volts ±10% and an output impedance of 3.6 kilohms.

This digital panel meter may be driven from an external time base for READ and HOLD operation by separating the unijunction oscillator output from the encode input.

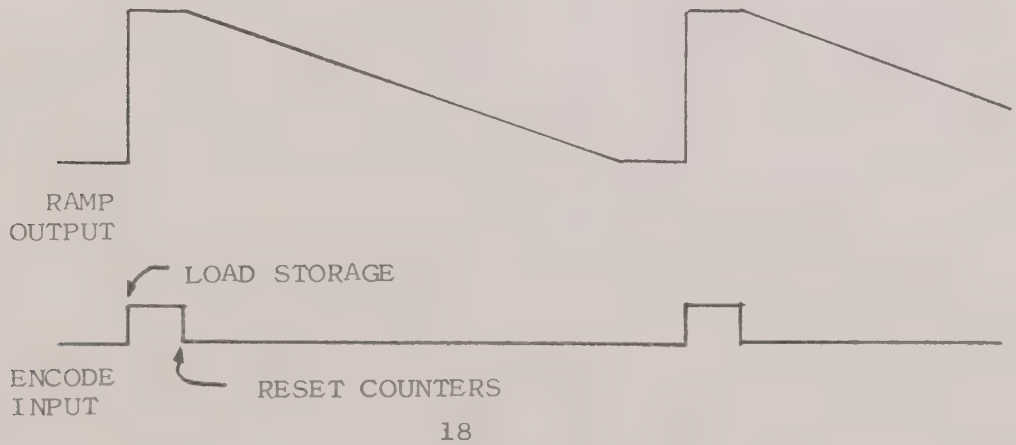

This is accomplished by removing the jumper between Pins 7 and 8 on the logic board. The encode input controls the conversion process. Driving the encode input positive, (MIN +1.8v, MAX +5v) resets the ramp to +15 volts and transfer existing counter data into the storage register. The positive state must exsist for a minimum of 10 MS. Grounding the encode input resets the counters to all zeros, and starts the ramp. A ground condition must exsist for a minimum of 150 MS to allow the ramp to complete the conversion process.

NOTE

The data gathered during this process will not be displayed until the encode input is again driven positive.

4.1 CALIBRATION PROCEDURE

The following calibration procedure may be performed on a routine basis to insure that the unit remains within the specified tolerances. This procedure should always be performed after any repairs are made on the basic accuracy determing circuitry. Before calibrating the unit, apply AC power and allow a minimum of one hour to permit the internal circuitry to stabilize.

This procedure covers the following adjustments:

1) Zero Adjustment
2) Full Scale Adjustment
3) Linearity Adjustment

The following test equipment is required to perform the calibration procedure:

1. Precision DC voltage standard; KINTEL 321 or the equivalent.

The calibration procedure should be performed as follows:

1. Short the input leads together and adjust the front panel zero control for all zeros in the display.

2. Check the work sheet in the front of this manual to determine the full scale input voltage and scale factor.

3. Apply a precision +DC voltage near full scale and adjust the calibration with the front panel calibration control until the digital panel meter reads the exact voltage from the DC standard.

4. Apply the same voltage in the negative polarity and adjust the linearity control so that the machine indicates the exact voltage ±1 digit. Not all models of the 8361/8461 Digital Panel Meter are supplied with a linearity control. If no control is present, the machine should indicate ±1 digit of the correct voltage when used in the negative polarity.

4.2 TEST PROCEDURE

The following test procedure, or any part of it, may be performed as required. This procedure should only be performed after completing 4.1 CALIBRATION PROCEDURE. This test procedure covers the following specifications for the digital panel meter:

1. Common Mode Rejection
2. Input Impedance
3. Temperature Coefficient
4. Stability
5. Resolution
6. Input Overload
7. Line Voltage Range
8. Optional Filter
9. Reading Rate

The following test equipment is required to perform this test procedure:

1. Precision DC voltage standard, Kintel Model 321 or equivalent.

2. Oscilloscope, Tektronix Model 531 or equivalent.

3. Oscilloscope Preamplifier, Tektronix Model L or equivalent.

4. Sine wave oscillator, H.P. 200 CD or equivalent.

5. AC wattmeter/voltmeter, Triplett Model 661 or equivalent.

6. Variac, Superior Electric Model 216 or equivalent

7. Precision Resistor, 1.0 Megohm 0.1 per cent

4.2.1 AC COMMON MODE REJECTION

Short the panel meter input leads together and connect to the high output of the oscillator as shown on Page 22.

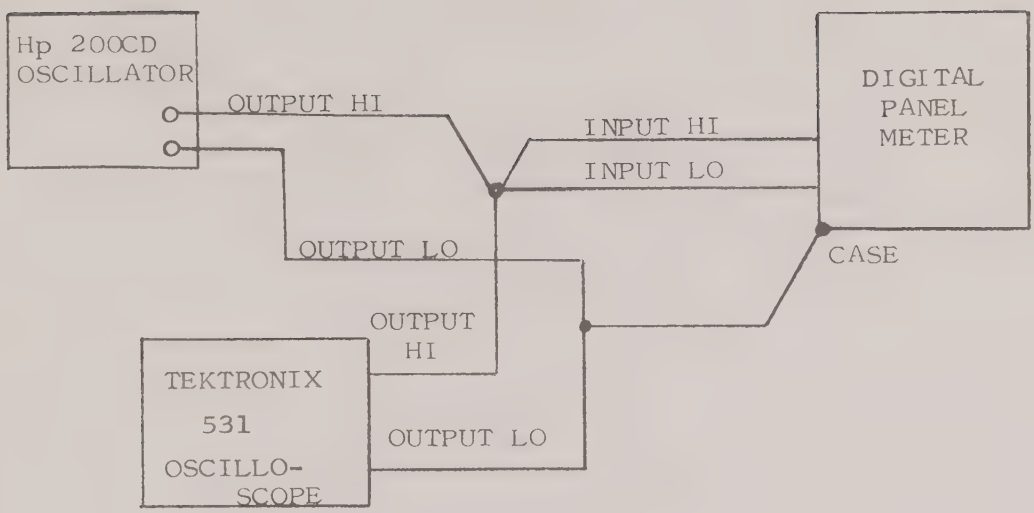

Connect the low output of the oscillator to the panel meter case and connect the oscilloscope across the oscillator output. Adjust the oscillator to obtain a 2 volts peak-to-peak output at 60 H_z. The digital panel meter must display ± 1 digit or less.

4.2.2 DC COMMON MODE REJECTION

Short the panel meter input leads together and connect to the high output of a DC voltage source. Connect the low output of the voltage source to the case of the panel meter as shown below.

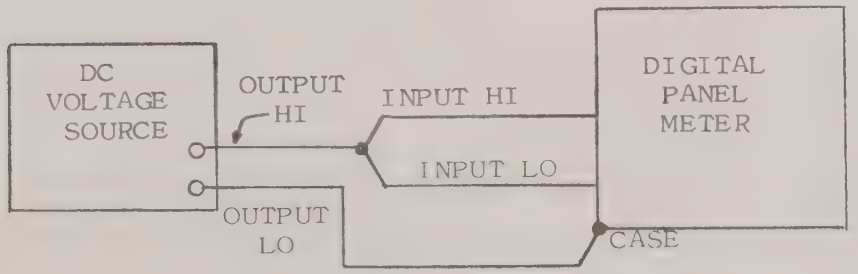

Adjust the DC output voltage to 100 VDC and check that the display indicates ± 1 digit or less.

4.2.3 INPUT IMPEDANCE

Using the work sheet, in the front of this manual, determine the input impedance of the panel meter.

Connect a .1% 1.0 megohm resistor in series with the input high lead of the panel meter. Connect the panel meter input low lead to the output low lead of a precision DC voltage source. Connect the 1.0 megohm resistor to the high output of the DC voltage source. Set the voltage source to that value indicated to be full scale from the WORK SHEET.

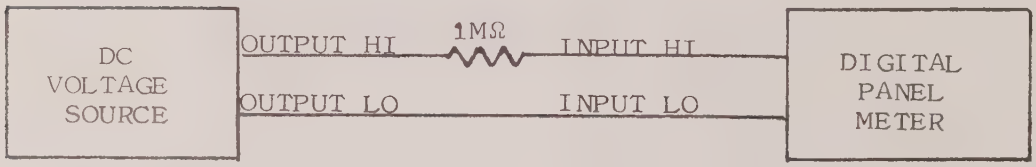

If the specified input impedance is 10 megohms, the reading will be 91% of full scale ± 2%. If the specified input impedance is 100 megohms, the reading will be 99% of full scale or higher.

4.2.4 TEMPERATURE COEFFICIENT

Allow the machine to warm-up for one hour at room temperature, 25°C and check the full scale calibration as given in the calibration adjustment procedure. Place the unit in an environmental chamber and raise the temperature to 50°C. Allow the unit at least one hour to stabilize at 50°C and then check the calibration. The allowable full scale excursion for the Model 8361 is ±10 digits at full scale. The allowable excursion for a Model 8461 is ± 15 digits.

4.2.5 TIME STABILITY

Allow the panel meter to stabilize at 25°C for two hours. Connect the input to a precision full scale DC voltage source. Monitor the digital panel meter

display for a 24 hour period at 25°C. The allowable excursion is ± 1 digit.

4.2.6 RESOLUTION

Connect the panel meter input to a precision DC voltage source. Apply an input of one volt. Vary this input by precisely the voltage represented by one digit. The display should read this one digit change.

4.2.7 INPUT OVERLOAD

Apply a full scale input voltage and record the reading. Apply an input of 10 times full scale, not to exceed 1200 volts DC for 10 seconds. Return the input to the original full scale voltage. The unit should return to the original reading ±1 digit, within 30 seconds.

4.2.8 LINE VOLTAGE RANGE

The following line voltage tests are made around 115 volts AC 60Hz. If the unit is used on 230 volts AC or other than 60Hz the test should be run at that voltage or frequency.

Connect the variac to the 115 volts AC 60Hz line. Connect the wattmeter/voltmeter to the output of the variac and connect the panel meter to the wattmeter/voltmeter output. Apply a full scale input signal to the digital panel meter. Vary the line voltage from 105 to 125 volts AC and check that the total variation is two digits or less for the Model 8461 and four digits or less for the 8361 Model digital panel meter.

4.2.9 INPUT FILTER

The following tests only apply to those units equipped with the optional input filter.

Connect the panel meter input leads to the output to the sine wave oscillator. Also connect the

oscilloscope to the oscillator output. Set the oscillator to 60Hz and increase the output until the least significant digit indicates alternately zeros and ones. Measure the peak output of the oscillator on the oscilloscope. Divide the sensitivity of the least significant digit into the peak sine wave input. This gives the rejection at 60Hz expressed as a voltage ratio. This voltage ratio should be greater than 316 to 1 or 50 db, and may run as high as 1000 to 1 or 60 db.

Connect the panel meter input high to the arm of a toggle switch. Connect the normally closed side of the switch to both the panel meter input low and the output low of a dc voltage source. Connect the normally open side of the switch to the high output of the voltage source as shown below.

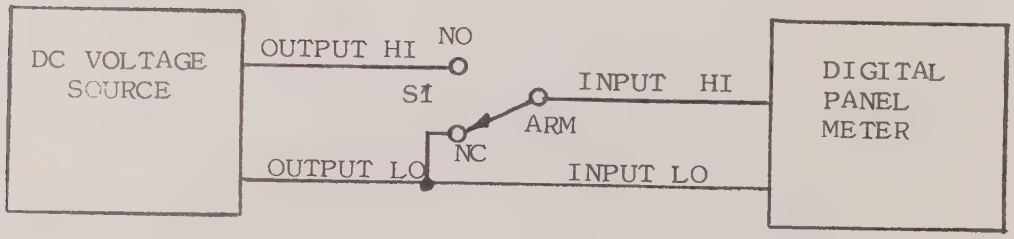

Connect the input of the panel meter to the DC voltage source with switch S1 and adjust the voltage source for a full scale indication on the panel meter. Return the switch to the normally closed position and measure the time required for the panel meter display to settle to zero with a stop-watch. The settling time must be less than one second. If a stop-watch is not available, the total number of erroneous conversions may be visually noted as the machine goes from a full scale input to zero. The number of erroneous conversions must not exceed four.

4.2.10 READING RATE

Connect the oscilloscope to Pin C of the output connector. Check that the pulses occur at 180 to 250 millisecond intervals.

5.1 GENERAL MAINTENANCE

The CALICO Digital Panel Meter is a solid state instrument designed to give years of trouble free service. Since the instrument has no moving parts maintenance is limited to periodic cleaning in accordance with good commercial shop practices.

5.2 TROUBLESHOOTING

Experience has shown that often the difficulties encountered with equipment are poor input signals or misinterpretation of specifications. Check to be sure that the input is not noisy or erratic, and that you fully understand the characteristics of this instrument as defined in the specifications.

Only skilled personnel who have studied the theory of operation section of this manual should attempt to repair the instrument.

The following power supplies should be checked in event of a malfunction.

1. +3.6 volt power supply, ±10% (cathode A1CR1)
2. +15 volt power supply, ±10% (emitter A1Q1)
3. -15 volt power supply, ±10% (emitter A1Q2)
4. +200 volt power supply, ±10% (cathode A1CR13)

If the problem is not in the power supply section of the machine, check that the wave forms shown in figure 3 are correct.

1. The ramp output is available at A6IC2 Pin 6.
2. The comparator outputs are available at A6IC3 Pin 6 and A6IC4 Pin 6.
3. The exclusive or gate output is available at A5IC2 Pin 5.
4. The count pulse train is available at A5IC5 Pin 8.
5. The time base output is available at A5Q1-B1 or at Pin C of the output connector.
6. The ramp reset is available at A5IC3 Pin 3.
7. The print command is available at A5IC3 Pin 2.
8. The load storage register signal is available at A5IC3 Pin 5.
9. The decade counter reset signal is available at A5IC3 Pin 7.

CIRCUIT DIAGRAMS

6.1 GENERAL

This section contains schematics and mechanical diagrams necessary for operation and maintenance of the 8361/8461 Series Digital Panel Meter. The schematic diagrams illustrate the circuit while the mechanical assemblies indicate the part placement.

6.2 REFERENCE DESIGNATIONS

Partial reference designators are shown on schematics and mechanical drawings. Prefix these reference designators with assembly and/or sub-assembly designation for the complete reference designator. For example:

Assembly/Sub-Assembly	Component	Complete Designation
A1	C30	A1C30
None	T1	T1
A3	CR1	A3CR1

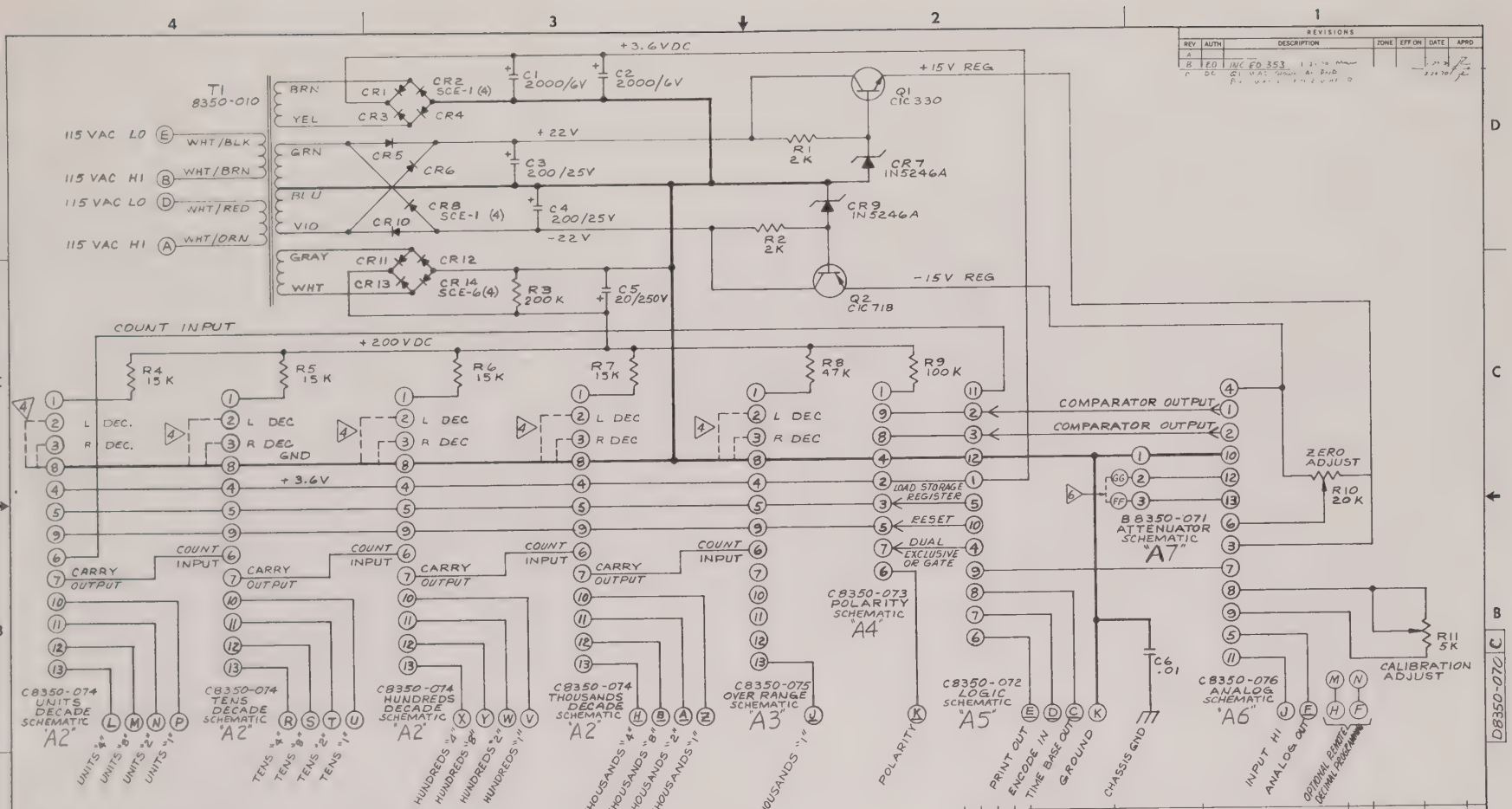

6. JUMPER IS REQUIRED IN ABSENSE OF THE ATTENUATOR P.C. BOARD = B350-706
5. DECIMAL POINT REMOTE PROGRAMMING IS POSSIBLE USING OUTPUT PINS H & F.
4. DECIMAL POINT HOOK UP IS BETWEEN PIN 2 OR PIN 3 TO PIN 8 AS REQUIRED.
3. CAPACITANCE ARE IN µF.
2. RESISTORS ARE 1/4 W 5%.
1. FOR P.C. BOARD ASSY SEE DWG. No. D8350-705

NOTES (UNLESS OTHERWISE SPECIFIED)

REVISIONS						
REV	AUTH	DESCRIPTION	ZONE	EFF ON	DATE	APRD
A						
B	EO	INC EO 353				
C	DC					

REQD PER ASSY	ITEM NO	PART NUMBER	PART NAME	MATERIAL — SPECIFICATION	CODE IDENT	FINISH	REF DES.	ZONE

DIM IN INCHES TOLERANCES XXX ± .010 XX ± .03 X° ± 30' — BREAK ALL SHARP CORNERS & EDGES — MACH SURFACES ✓

EXCEPT AS OTHERWISE PROVIDED BY CONTRACT, THESE DRAWINGS AND SPECIFICATIONS ARE THE PROPERTY OF CALICO AND SHALL NOT BE REPRODUCED OR COPIED OR USED AS THE BASIS FOR THE MANUFACTURE OR SALE OF APPARATUS WITHOUT WRITTEN PERMISSION.

DASH NO. | QTY REQD | NEXT ASSEMBLY | EFF ON | AUTH

D

TITLE SCHEMATIC DIAGRAM - MASTER BD ASSY. A1

MODEL 8361

RELEASE R. Taylor 1/1/71 | CHECKER | DESIGN | DRAFTSMAN D. A. Ward 1/4/71 | PURCHASING | PROJ ENGR GT | CHF ENGR

CALICO
CALIFORNIA INSTRUMENTS CORP
SAN DIEGO, CALIFORNIA

CONTRACT NO. | CODE IDENT 16067

DWG NO. D8350-070 | REV C

SCALE NONE | SHEET 1 OF 1

CALICO F 488

A1

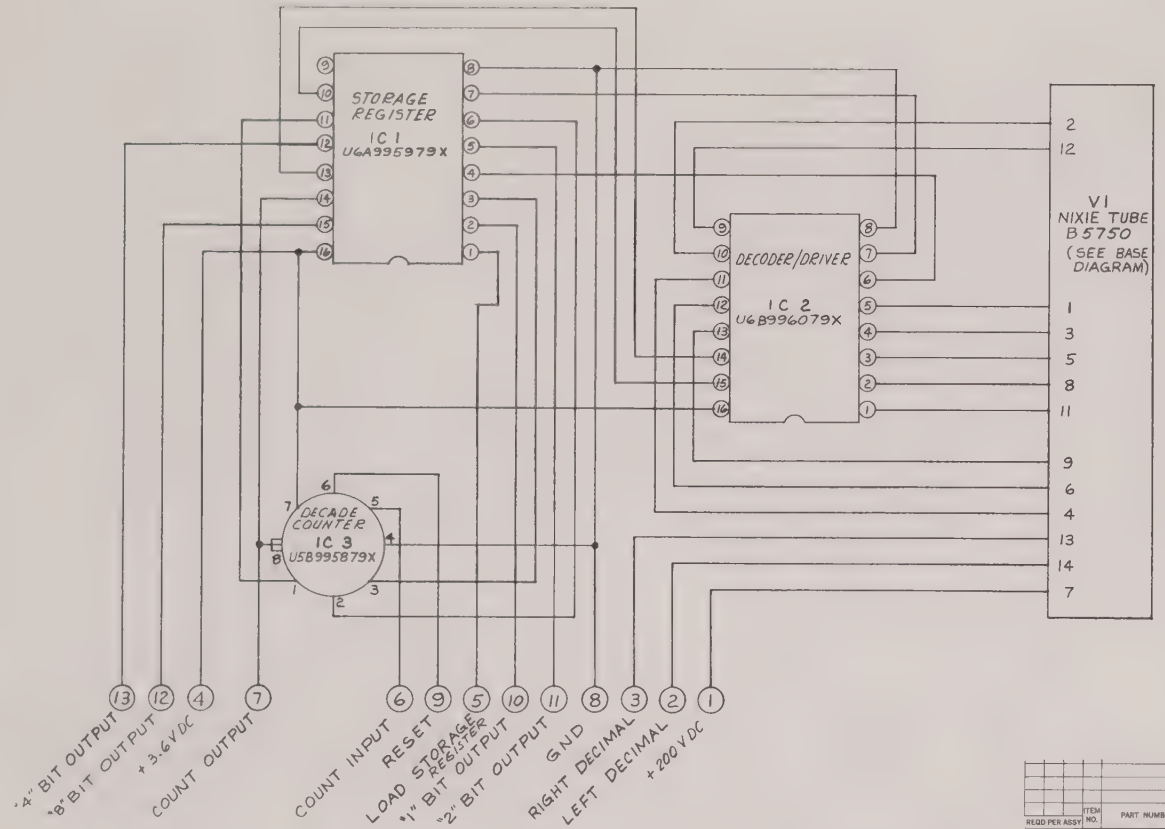

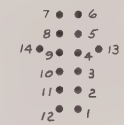

V1 BASE DIAGRAM
BOTTOM VIEW

PIN	CONNECTIONS
1	NUMERAL 1
2	2
3	3
4	4
5	5
6	NUMERAL 6
7	ANODE
8	NUMERAL 7
9	NUMERAL 8
10	ANODE
11	NUMERAL 9
12	NUMERAL 0
13	RT DEC PT
14	LFT DEC PT

1. FOR P.C. BOARD ASSY SEE DWG. NO. C8350-700

NOTES (UNLESS OTHERWISE SPECIFIED)

REVISIONS

REV	AUTH	DESCRIPTION	ZONE	EFF ON	DATE	APRD

REQD PER ASSY	ITEM NO.	PART NUMBER	PART NAME	MATERIAL — SPECIFICATION	CODE IDENT	FINISH	REF DES	ZONE

DIM IN INCHES TOLERANCES XXX .010 XX .03 X .30

BREAK ALL SHARP CORNERS & EDGES MACH SURFACES

DWG SIZE D

TITLE SCHEMATIC DIAGRAM-DECADE BD. A2

CALICO
CALIFORNIA INSTRUMENTS CORP
SAN DIEGO, CALIFORNIA

MODEL 8361

CONTRACT NO. CODE IDENT 16067

DWG NO D8350-074 REV /

SCALE NONE SHEET 1 OF 1

A2

D8350-074

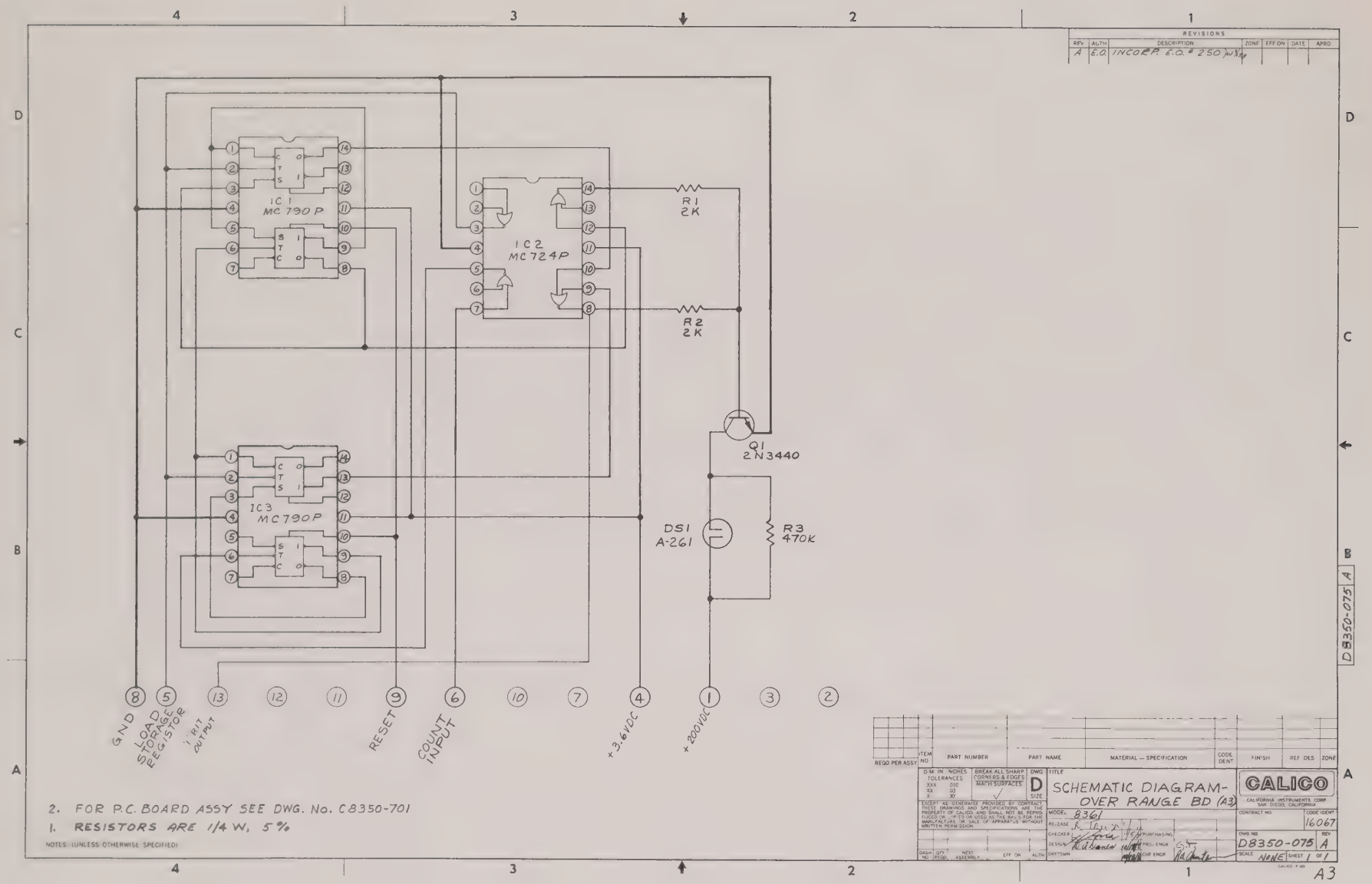

REVISIONS
REV | AUTH | DESCRIPTION | ZONE | EFF ON | DATE | APRO
A | E.O. | INCORP. E.O. # 250
IC1 MC790P
IC2 MC724P
IC3 MC790P
R1 2K
R2 2K
Q1 2N3440
DS1 A-261
R3 470K
GND
LOAD STORAGE REGISTOR
1 BIT OUTPUT
RESET
COUNT INPUT
+3.6VDC
+200VDC
2. FOR P.C. BOARD ASSY SEE DWG. No. C8350-701
1. RESISTORS ARE 1/4 W, 5%
NOTES (UNLESS OTHERWISE SPECIFIED)
REQD PER ASSY
ITEM NO
PART NUMBER
PART NAME
MATERIAL — SPECIFICATION
CODE IDENT
FINISH
REF DES
ZONE
D.M. IN INCHES
TOLERANCES
XXX .010
XX .03
X .30
BREAK ALL SHARP CORNERS & EDGES
MACH SURFACES
DWG SIZE D
TITLE
SCHEMATIC DIAGRAM-OVER RANGE BD (A3)
MODEL 8361
RELEASE
CHECKER
DESIGN
DRFTSMN
PURCHASING
PROJ ENGR
CHIF ENGR
CALICO
CALIFORNIA INSTRUMENTS CORP
SAN DIEGO, CALIFORNIA
CONTRACT NO
CODE IDENT 16067
DWG NO D8350-075
REV A
SCALE NONE
SHEET 1 OF 1
A3
D8350-075 A

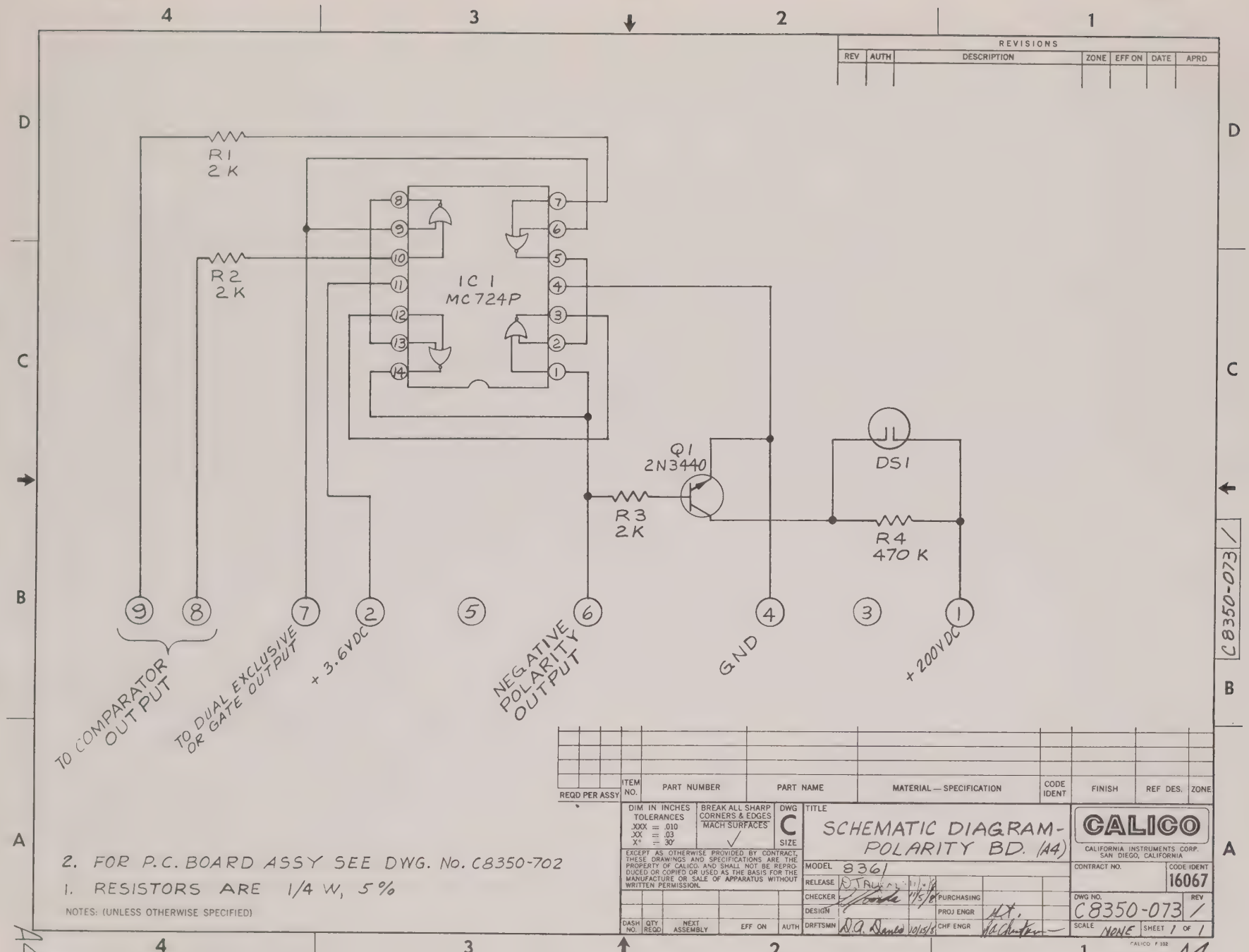

REVISIONS
REV
AUTH
DESCRIPTION
ZONE
EFF ON
DATE
APRD
R1
2 K
R2
2 K
IC 1
MC724P
Q1
2N3440
R3
2K
DS1
R4
470 K
TO COMPARATOR OUTPUT
TO DUAL EXCLUSIVE OR GATE OUTPUT
+ 3.6VDC
NEGATIVE POLARITY OUTPUT
GND
+ 200VDC
C8350-073 /
REQD PER ASSY
ITEM NO.
PART NUMBER
PART NAME
MATERIAL — SPECIFICATION
CODE IDENT
FINISH
REF DES.
ZONE
DIM IN INCHES
TOLERANCES
.XXX = .010
.XX = .03
X° = 30'
BREAK ALL SHARP CORNERS & EDGES
MACH SURFACES
DWG
C
SIZE
TITLE
SCHEMATIC DIAGRAM-
POLARITY BD. (A4)
CALICO
CALIFORNIA INSTRUMENTS CORP.
SAN DIEGO, CALIFORNIA
EXCEPT AS OTHERWISE PROVIDED BY CONTRACT, THESE DRAWINGS AND SPECIFICATIONS ARE THE PROPERTY OF CALICO, AND SHALL NOT BE REPRODUCED OR COPIED OR USED AS THE BASIS FOR THE MANUFACTURE OR SALE OF APPARATUS WITHOUT WRITTEN PERMISSION.
MODEL 8361
RELEASE
CHECKER
DESIGN
DRFTSMN
PURCHASING
PROJ ENGR
CHF ENGR
CONTRACT NO.
CODE IDENT
16067
DWG NO.
C8350-073
REV
/
SCALE NONE
SHEET 1 OF 1
DASH NO.
QTY REQD
NEXT ASSEMBLY
EFF ON
AUTH
2. FOR P.C. BOARD ASSY SEE DWG. No. C8350-702
1. RESISTORS ARE 1/4 W, 5%
NOTES: (UNLESS OTHERWISE SPECIFIED)
A4

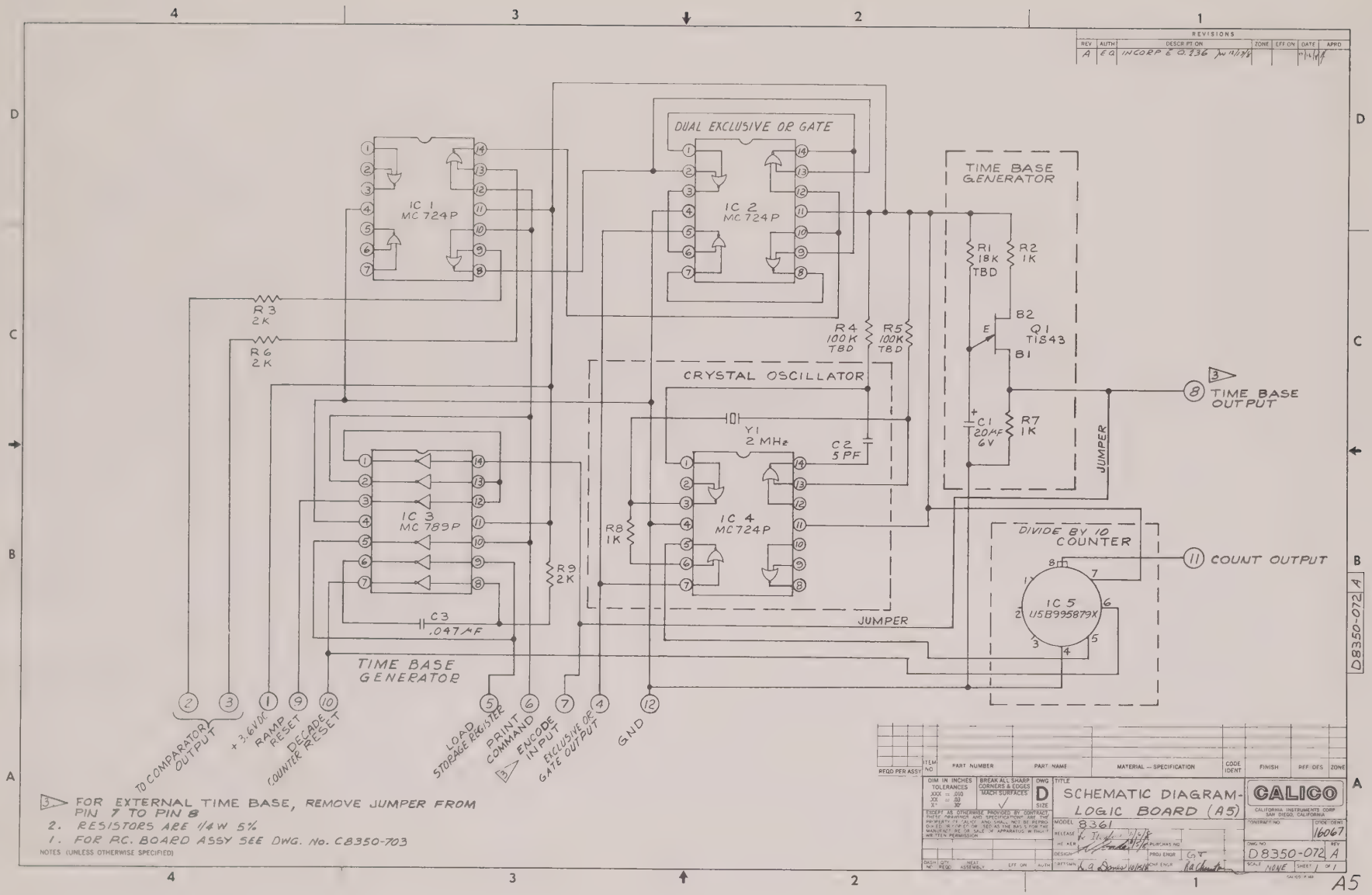
REVISIONS
REV | AUTH | DESCRIPTION | ZONE | EFF ON | DATE | APPD
A | EQ | INCORP E 0.236
DUAL EXCLUSIVE OR GATE
IC 1 MC 724P
IC 2 MC 724P
IC 3 MC 789P
IC 4 MC 724P
IC 5 USB995879X
TIME BASE GENERATOR
R1 18K TBD
R2 1K
R3 2K
R6 2K
R4 100K TBD
R5 100K TBD
R7 1K
R8 1K
R9 2K
Q1 TIS43
B2
B1
E
C1 20μF 6V
C2 5PF
C3 .047μF
Y1 2 MHz
CRYSTAL OSCILLATOR
JUMPER
TIME BASE OUTPUT
DIVIDE BY 10 COUNTER
COUNT OUTPUT
TO COMPARATOR OUTPUT
+3.6VDC
RAMP RESET
DECADE COUNTER RESET
LOAD STORAGE REGISTER
PRINT COMMAND
ENCODE INPUT
EXCLUSIVE OR GATE OUTPUT
GND
3 FOR EXTERNAL TIME BASE, REMOVE JUMPER FROM PIN 7 TO PIN 8
2. RESISTORS ARE 1/4W 5%
1. FOR P.C. BOARD ASSY SEE DWG. No. C8350-703
NOTES (UNLESS OTHERWISE SPECIFIED)
REQD PER ASSY | ITEM NO | PART NUMBER | PART NAME | MATERIAL — SPECIFICATION | CODE IDENT | FINISH | REF DES | ZONE
DIM IN INCHES TOLERANCES .XXX ± .010 .XX ± .03 X° ± 30'
BREAK ALL SHARP CORNERS & EDGES MACH SURFACES
DWG SIZE D
TITLE SCHEMATIC DIAGRAM-LOGIC BOARD (A5)
CALICO
CALIFORNIA INSTRUMENTS CORP SAN DIEGO, CALIFORNIA
MODEL 8361
CONTRACT NO
CODE IDENT 16067
DWG NO D8350-072
REV A
SCALE NONE
SHEET 1 OF 1
D8350-072 A
A5

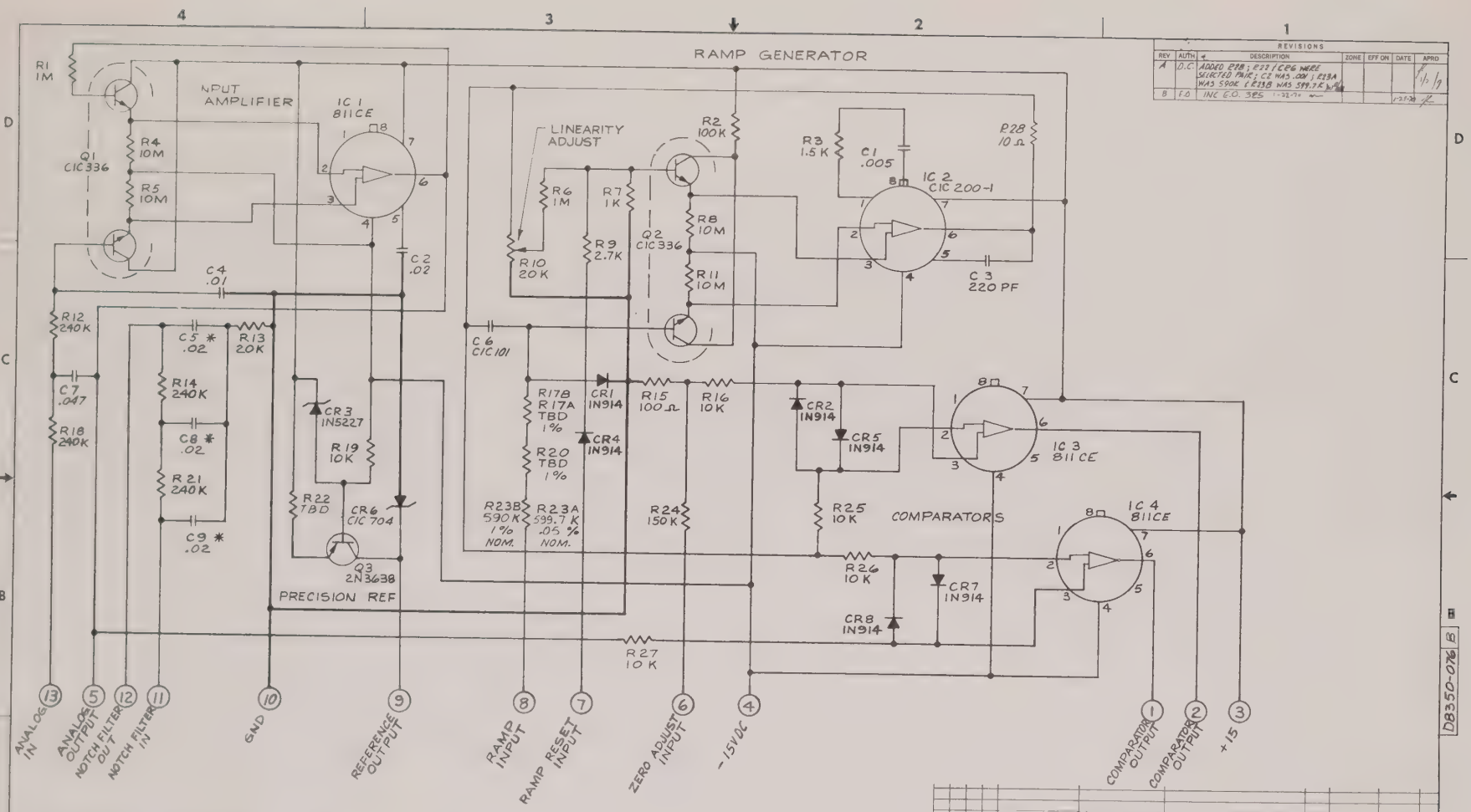

REV	AUTH	DESCRIPTION	ZONE	EFF ON	DATE	APRD
A	D.C.	ADDED R28; R22 / CR6 WERE SELECTED PAIR; C2 WAS .001; R23A WAS 590K & R23B WAS 599.7K				1/2/9
B	F.O.	INC E.O. 385			1-22-70	

6. CAPACITANCE ARE IN μF.
5. ALL REF. DES. ENDING IN "B" ARE FOR 8461 SERIES.
4. ALL REF. DES. ENDING IN "A" ARE FOR 8361 SERIES.
3. * INDICATES FILTER COMPONENTS
2. FOR P.C. BOARD ASSY SEE DWG. No. C8350-704
1. ALL RESISTORS EXCEPT TBD, ARE ±5% 1/4W.

NOTES: UNLESS OTHERWISE SPECIFIED

REQD PER ASSY	ITEM NO.	PART NUMBER	PART NAME	MATERIAL — SPECIFICATION	CODE IDENT	FINISH	REF DES.	ZONE

DIM IN INCHES TOLERANCES .XXX = .010 .XX = .03 .X = 30'
BREAK ALL SHARP CORNERS & EDGES
MACH SURFACES √
DWG D SIZE

TITLE SCHEMATIC DIAGRAM-ANALOG BD. A6

CALICO
CALIFORNIA INSTRUMENTS CORP SAN DIEGO, CALIFORNIA

MODEL 8361
RELEASE
CHECKED
DES'GN
DRAFTSMN
PURCHASING
PROJ ENGR
CHF ENGR
CONTRACT NO.
CODE IDENT 16067
DWG NO D8350-076 REV B
SCALE NONE SHEET 1 OF 1

DASH NO. QTY REQD NEXT ASSEMBLY EFF ON AUTH

D8350-076 B

A6

B8350-071 /

REVISIONS						
REV	AUTH	DESCRIPTION	ZONE	EFF ON	DATE	APRD

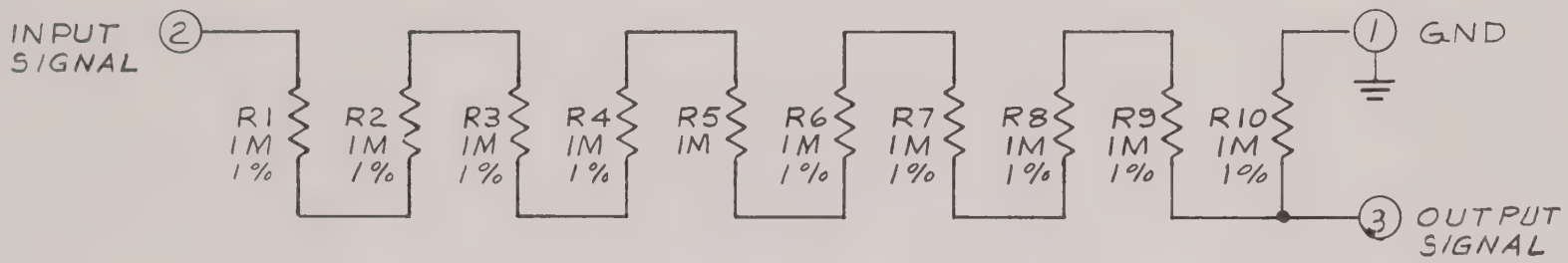

REQD PER ASSY	ITEM NO.	PART NUMBER	PART NAME	MATERIAL — SPECIFICATION	CODE IDENT	FINISH	REF DES.	ZONE

DIM IN INCHES
TOLERANCES
.XXX = .010
.XX = .03
X° = 30'

BREAK ALL SHARP CORNERS & EDGES
MACH SURFACES ✓

DWG SIZE: B

EXCEPT AS OTHERWISE PROVIDED BY CONTRACT, THESE DRAWINGS AND SPECIFICATIONS ARE THE PROPERTY OF CALICO AND SHALL NOT BE REPRODUCED OR COPIED OR USED AS THE BASIS FOR THE MANUFACTURE OR SALE OF APPARATUS WITHOUT WRITTEN PERMISSION.

TITLE: SCHEMATIC DIAGRAM-ATTENUATOR BD. (A7)

MODEL: 8461 ONLY

RELEASE	[signature]	11/9/8		
CHECKER	[signature]	11/5/8	PURCHASING	
DESIGN			PROJ ENGR	[signature]
DRFTSMN	D. A. Daniels	10/11/8	CHF ENGR	[signature]

DASH NO	QTY REQD	NEXT ASSEMBLY	EFF ON	AUTH

CALICO
CALIFORNIA INSTRUMENTS CORP.
SAN DIEGO, CALIFORNIA

CONTRACT NO.

CODE IDENT: 16067

DWG NO.: B8350-071 REV: /

SCALE: NONE SHEET 1 OF 1

1. FOR P.C. BOARD SEE DWG. No. B8350-706

NOTES: (UNLESS OTHERWISE SPECIFIED)

CALICO F 101

A7

A7

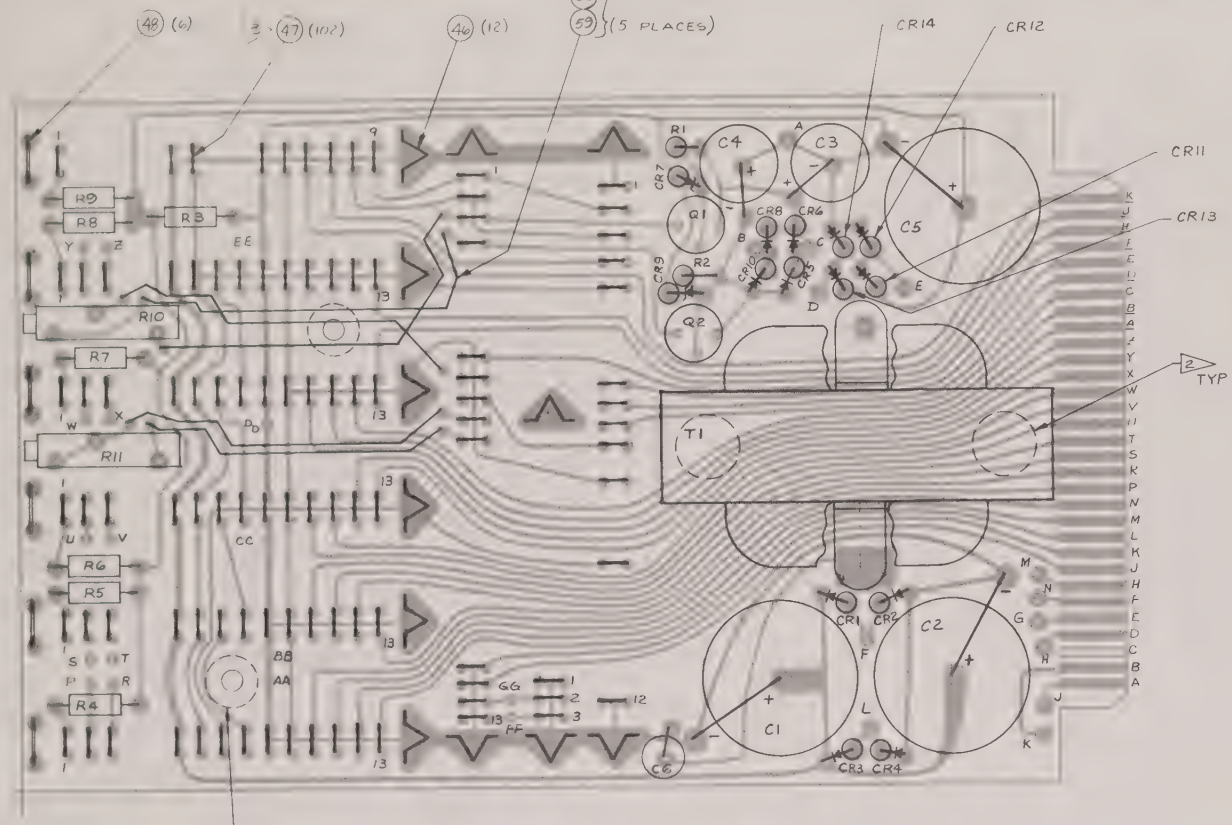

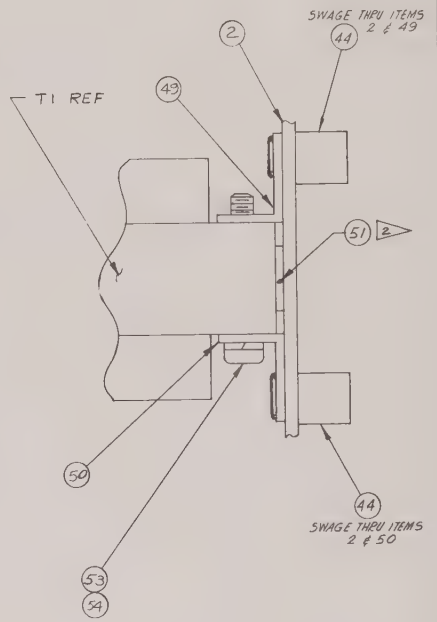

A1

45 (2) SWAGE NEAR SIDE

3 INSTALL ITEM 47 .016 MIN/.032 MAX OFF SURFACE OF P.C. BOARD.

2 INSTALL ITEM 51 UNDER BOTH ENDS OF T1.

1. FOR SCHEMATIC DIAGRAM SEE DWG NO. D8350-070

NOTES (UNLESS OTHERWISE SPECIFIED)

TRANSFORMER WIRE TABLE			
WIRE	EYELET	WIRE	EYELET
BLU	A	WHT/BLK	G
VIO	B	WHT/RED	H
GRN	C	WHT/ORN	J
WHT	D	WHT/BRN	K
GREY	E	YEL	L
BRN	F		

REVISIONS

REV	AUTH	DESCRIPTION	ZONE	EFF ON	DATE	APRD

FOR PARTS LIST SEE SH 4 & 5

REQD PER ASSY	ITEM NO.	PART NUMBER	PART NAME	MATERIAL SPECIFICATION	CODE IDENT	FINISH	REF DES.	ZONE

DIM IN INCHES TOLERANCES .XXX = .010 .XX = .03 .X = .30 — BREAK ALL SHARP CORNERS & EDGES MACH SURFACES √ — DWG SIZE D

TITLE: MASTER BOARD ASSY (A1)

CALICO — CALIFORNIA INSTRUMENTS CORP SAN DIEGO, CALIFORNIA

MODEL 8361

CONTRACT NO. — CODE IDENT 16067

DWG NO. D8350-705 — REV C

SCALE 4/1 — SHEET 2 OF 5

A1

D8350-705 C

REVISIONS						
REV	AUTH	DESCRIPTION	ZONE	EFF ON	DATE	APRD

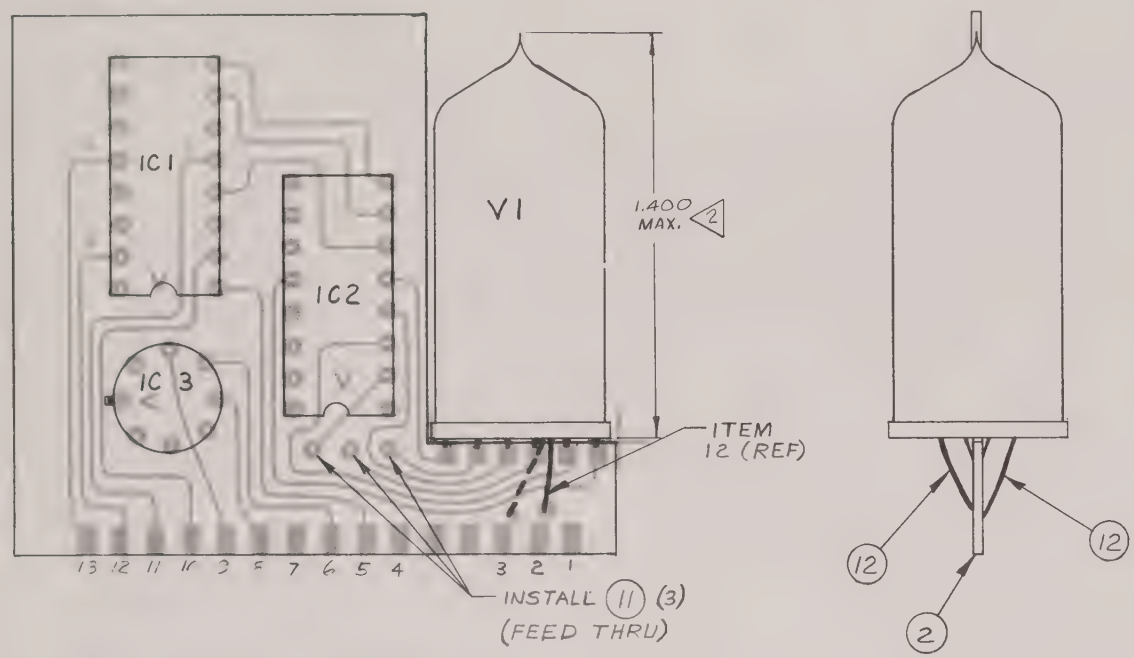

A2

REQD PER ASSY	ITEM NO.	PART NUMBER	PART NAME	MATERIAL — SPECIFICATION	CODE IDENT	FINISH	REF DES.	ZONE
			FOR PARTS LIST SEE SH. 4					

DIM IN INCHES TOLERANCES .XXX = .010 .XX = .03 X° = 30'

BREAK ALL SHARP CORNERS & EDGES MACH SURFACES ✓

DWG SIZE C

TITLE DECADE BOARD ASSY. (A2)

CALICO
CALIFORNIA INSTRUMENTS CORP. SAN DIEGO, CALIFORNIA

EXCEPT AS OTHERWISE PROVIDED BY CONTRACT, THESE DRAWINGS AND SPECIFICATIONS ARE THE PROPERTY OF CALICO, AND SHALL NOT BE REPRODUCED OR COPIED OR USED AS THE BASIS FOR THE MANUFACTURE OR SALE OF APPARATUS WITHOUT WRITTEN PERMISSION.

MODEL 8361

RELEASE [signature] 1/6/8

CHECKER [signature] PURCHASING

DESIGN PROJ ENGR

DRFTSMN D. A. Danes 10/11/8 CHF ENGR

CONTRACT NO

CODE IDENT 16067

DWG NO. C8350-700 REV B

SCALE 4/1 SHEET 2 OF 4

DASH NO	QTY REQD	NEXT ASSEMBLY	EFF ON	AUTH

[illegible] FROM PLASTIC BASE TO TIP NOT [illegible]

1 FOR SCHEMATIC SEE DWG NO. D8350-074

NOTES: (UNLESS OTHERWISE SPECIFIED)

C8350-700 B

CALICO F-102

A2

REVISIONS						
REV	AUTH	DESCRIPTION	ZONE	EFF ON	DATE	APRD

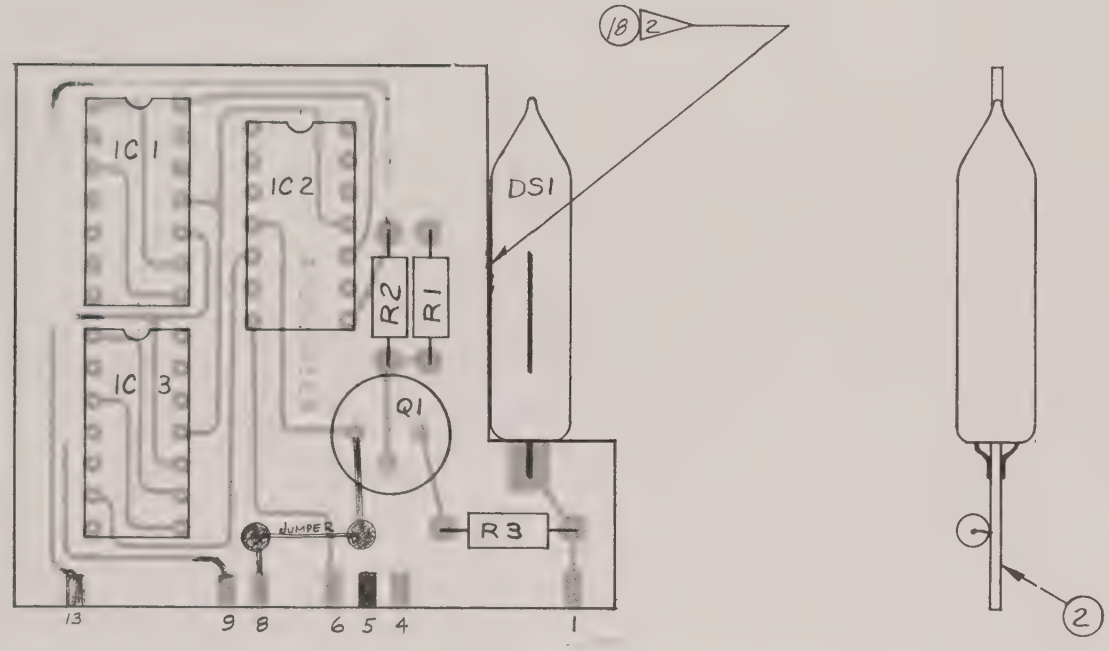

A3

C8350-701 A

REQD PER ASSY	ITEM NO.	PART NUMBER	PART NAME	MATERIAL — SPECIFICATION	CODE IDENT	FINISH	REF DES.	ZONE
			FOR PARTS LIST SEE SH. 4					

2. BOND V1 TO BOARD IN APPROX. AREA SHOWN, USING SMALL AMOUNT OF (18) CEMENT.
1. FOR SCHEMATIC SEE DWG NO. D8350-075

NOTES: (UNLESS OTHERWISE SPECIFIED)

DIM IN INCHES TOLERANCES .XXX = .010 .XX = .03 X° = 30'

BREAK ALL SHARP CORNERS & EDGES MACH SURFACES √

DWG SIZE C

EXCEPT AS OTHERWISE PROVIDED BY CONTRACT, THESE DRAWINGS AND SPECIFICATIONS ARE THE PROPERTY OF CALICO AND SHALL NOT BE REPRODUCED OR COPIED OR USED AS THE BASIS FOR THE MANUFACTURE OR SALE OF APPARATUS WITHOUT WRITTEN PERMISSION.

DASH NO.	QTY REQD	NEXT ASSEMBLY	EFF ON	AUTH

TITLE OVER RANGE BOARD ASSY (A3)

MODEL 8361

RELEASE	[signature]	11/9/8	
CHECKER	[signature]	9/5/8	PURCHASING
DESIGN			PROJ ENGR
DRFTSMN	D. A. Danes	10/17/8	CHF ENGR

CALICO
CALIFORNIA INSTRUMENTS CORP
SAN DIEGO, CALIFORNIA

CONTRACT NO.

CODE IDENT 16067

DWG NO. C 8350-701 REV A

SCALE 4/1 SHEET 2 OF 4

CALICO F-102 A3

A3

REVISIONS						
REV	AUTH	DESCRIPTION	ZONE	EFF ON	DATE	APRD

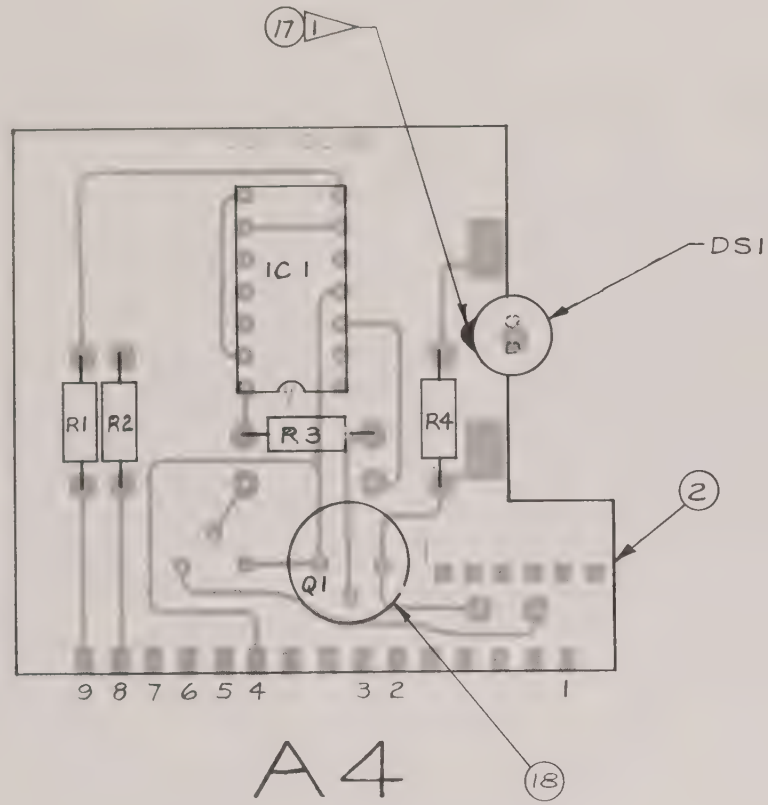

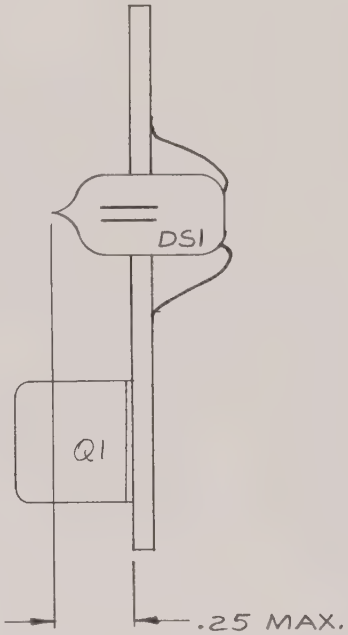

C8350-702 B

REQD PER ASSY	ITEM NO.	PART NUMBER	PART NAME	MATERIAL — SPECIFICATION	CODE IDENT	FINISH	REF DES.	ZONE
			FOR PARTS LIST SEE SH. 4					

2. FOR SCHEMATIC SEE DWG NO. C8350-073

1 BOND DS1 TO BOARD IN AREA SHOWN, (NEAR-SIDE ONLY) USING RTV CEMENT.

NOTES: (UNLESS OTHERWISE SPECIFIED)

DIM IN INCHES TOLERANCES .XXX = .010 .XX = .03 X° = 30′

BREAK ALL SHARP CORNERS & EDGES MACH SURFACES ✓

DWG SIZE C

EXCEPT AS OTHERWISE PROVIDED BY CONTRACT, THESE DRAWINGS AND SPECIFICATIONS ARE THE PROPERTY OF CALICO AND SHALL NOT BE REPRODUCED OR COPIED OR USED AS THE BASIS FOR THE MANUFACTURE OR SALE OF APPARATUS WITHOUT WRITTEN PERMISSION.

DASH NO	QTY REQD	NEXT ASSEMBLY	EFF ON	AUTH

TITLE POLARITY BD ASSY (A4)

MODEL 8361

RELEASE 11/5/8

CHECKER 11/5/8

DESIGN

DRFTSMN D. A. Danks 10/4/8

PURCHASING

PROJ ENGR

CHF ENGR

CALICO
CALIFORNIA INSTRUMENTS CORP.
SAN DIEGO, CALIFORNIA

CONTRACT NO.

CODE IDENT 16067

DWG NO. C8350-702 REV B

SCALE 4/1 SHEET 2 OF 4

CALICO F-102

A4

REVISIONS						
REV	AUTH	DESCRIPTION	ZONE	EFF ON	DATE	APRD

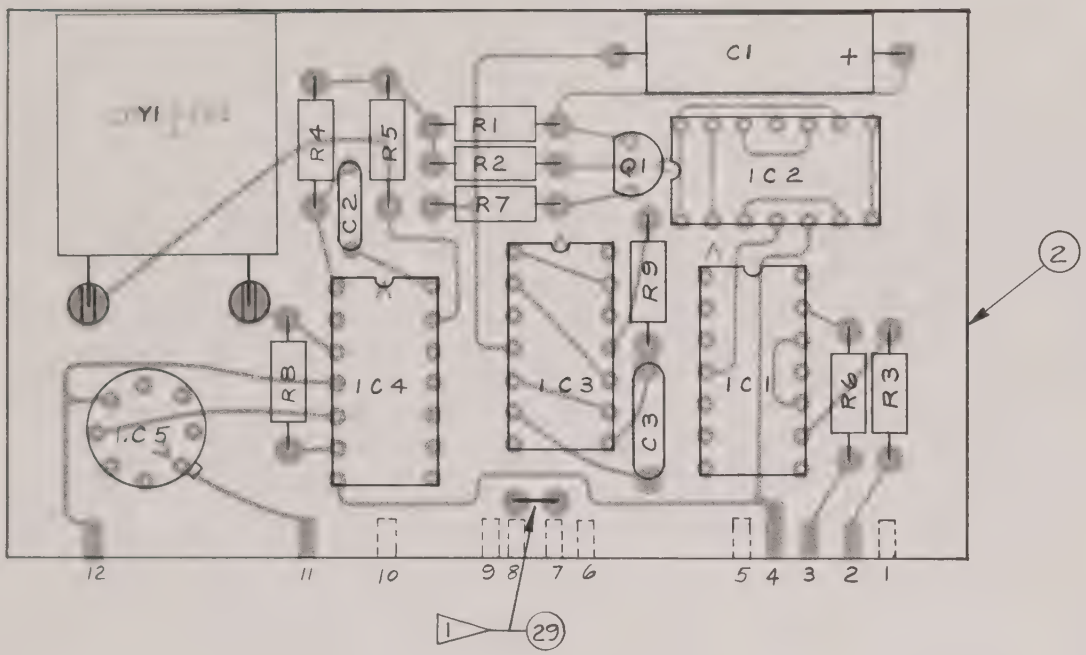

A5

REQD PER ASSY	ITEM NO.	PART NUMBER	PART NAME	MATERIAL — SPECIFICATION	CODE IDENT	FINISH	REF DES.	ZONE
			FOR PARTS LIST SEE SH 4					

DIM IN INCHES
TOLERANCES
.XXX = .010
.XX = .03
X° = 30'

BREAK ALL SHARP CORNERS & EDGES
MACH SURFACES ✓

DWG SIZE C

TITLE LOGIC BOARD ASSY (A5)

CALICO
CALIFORNIA INSTRUMENTS CORP.
SAN DIEGO, CALIFORNIA

EXCEPT AS OTHERWISE PROVIDED BY CONTRACT, THESE DRAWINGS AND SPECIFICATIONS ARE THE PROPERTY OF CALICO AND SHALL NOT BE REPRODUCED OR COPIED OR USED AS THE BASIS FOR THE MANUFACTURE OR SALE OF APPARATUS WITHOUT WRITTEN PERMISSION.

MODEL 8361
RELEASE D. Taylor 11/6/8
CHECKER [signature] 11/5/8
DESIGN
DRFTSMN D. A. Daniel 10/14/8
PURCHASING
PROJ ENGR
CHF ENGR

CONTRACT NO.
CODE IDENT 16067
DWG NO. C8350-703
REV /
SCALE 4/1
SHEET 2 OF 4

DASH NO.	QTY REQD	NEXT ASSEMBLY	EFF ON	AUTH

2. FOR SCHEMATIC, SEE DWG NO. D8350-072

1 FOR EXTERNAL TIME BASE REMOVE JUMPER BETWEEN PIN 5 & PIN 6

NOTES: (UNLESS OTHERWISE SPECIFIED)

C8350-703 /

CALICO F-102

A5

REVISIONS						
REV	AUTH	DESCRIPTION	ZONE	EFF ON	DATE	APRD

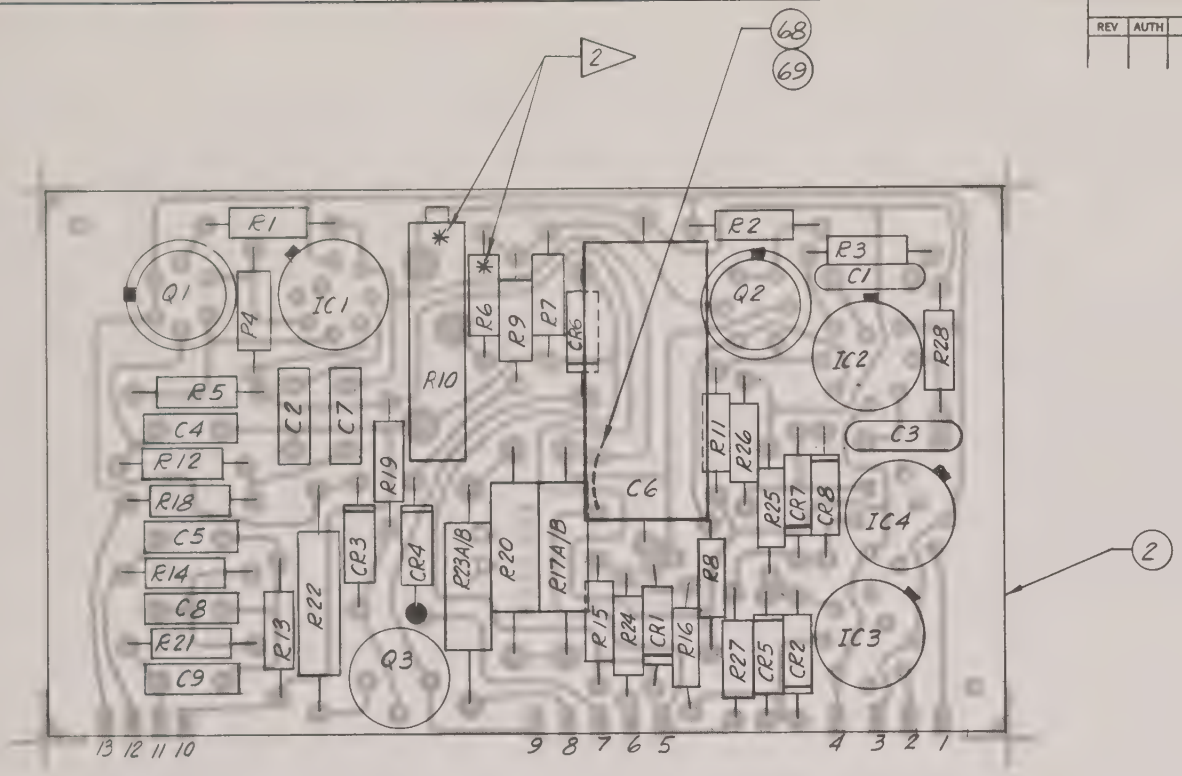

A6

4. ALL REF. DES. ENDING IN "B" ARE FOR 8461 SERIES.
3. ALL REF. DES. ENDING IN 'A' ARE FOR 8361 SERIES.
2 * FOR 8361 SERIES ONLY.
1. FOR SCHEMATIC SEE DWG. No. D 8350-076

NOTES: (UNLESS OTHERWISE SPECIFIED)

REQD PER ASSY	ITEM NO.	PART NUMBER	PART NAME	MATERIAL — SPECIFICATION	CODE IDENT	FINISH	REF DES.	ZONE
		PL 8350-704	PARTS LIST	SEE SHEETS 4 & 5				

DIM IN INCHES TOLERANCES XXX = .010 XX = .03 X° = 30'
BREAK ALL SHARP CORNERS & EDGES
MACH SURFACES ✓
DWG SIZE C

EXCEPT AS OTHERWISE PROVIDED BY CONTRACT, THESE DRAWINGS AND SPECIFICATIONS ARE THE PROPERTY OF CALICO AND SHALL NOT BE REPRODUCED OR COPIED OR USED AS THE BASIS FOR THE MANUFACTURE OR SALE OF APPARATUS WITHOUT WRITTEN PERMISSION.

TITLE ANALOG P.C. BOARD ASSY

MODEL 8361

RELEASE	D.T.	11/6/68		
CHECKER	J. ROORDA	11/5/68	PURCHASING	
DESIGN			PROJ ENGR	
DRFTSMN	D.A. DANES	10/22/68	CHF ENGR	

CALICO
CALIFORNIA INSTRUMENTS CORP
SAN DIEGO, CALIFORNIA

CONTRACT NO. | CODE IDENT 16067

DWG NO. C8350-704 | REV A

SCALE 4/1 | SHEET 2 OF 5

DASH NO.	QTY REQD	NEXT ASSEMBLY	EFF ON	AUTH

CALICO F 102

A6

C8350-704 A

B8350-706 /

REVISIONS						
REV	AUTH	DESCRIPTION	ZONE	EFF ON	DATE	APRD

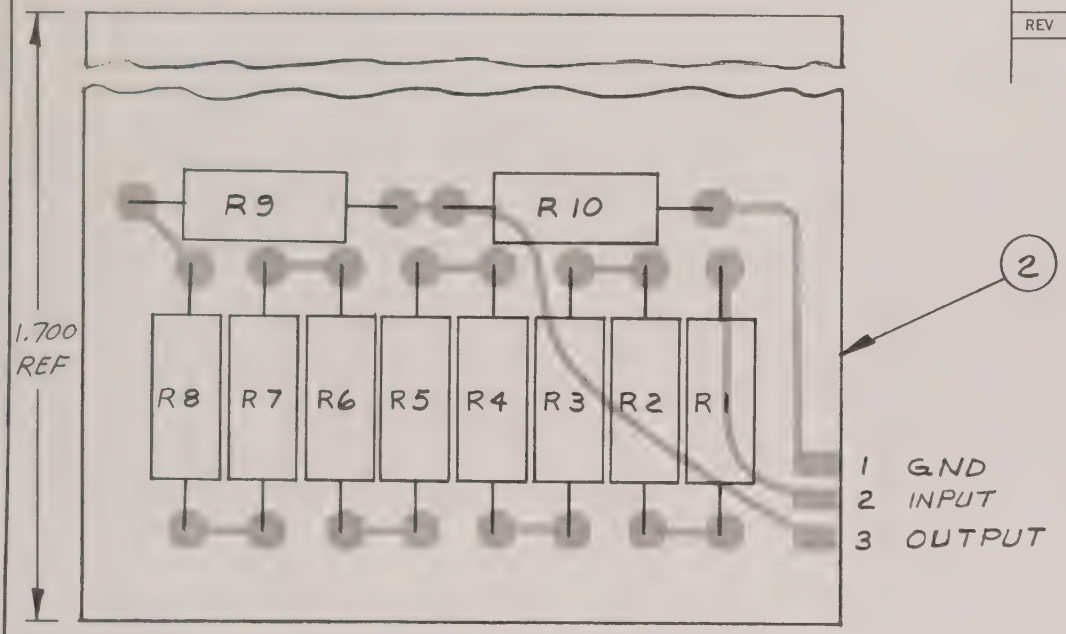

A7

REQD PER ASSY	ITEM NO.	PART NUMBER	PART NAME	MATERIAL — SPECIFICATION	CODE IDENT	FINISH	REF DES.	ZONE
			FOR PARTS	LIST SEE SH 4.				

1. FOR SCHEMATIC DIAGRAM SEE DWG NO. B8350-071

NOTES: (UNLESS OTHERWISE SPECIFIED)

DIM IN INCHES
TOLERANCES
.XXX = .010
.XX = .03
X° = 30'

BREAK ALL SHARP CORNERS & EDGES
MACH SURFACES ✓

DWG SIZE B

EXCEPT AS OTHERWISE PROVIDED BY CONTRACT, THESE DRAWINGS AND SPECIFICATIONS ARE THE PROPERTY OF CALICO. AND SHALL NOT BE REPRODUCED OR COPIED OR USED AS THE BASIS FOR THE MANUFACTURE OR SALE OF APPARATUS WITHOUT WRITTEN PERMISSION.

DASH NO	QTY REQD	NEXT ASSEMBLY	EFF ON	AUTH

TITLE
ATTENUATOR BOARD ASSY (A7)

MODEL 8461

RELEASE	D. [illegible]	11/6/8		
CHECKER	[illegible]	11/5/8	PURCHASING	
DESIGN			PROJ ENGR	
DRFTSMN	D. A. Davies	10/11/8	CHF ENGR	

CALICO
CALIFORNIA INSTRUMENTS CORP.
SAN DIEGO, CALIFORNIA

CONTRACT NO.
CODE IDENT 16067
DWG NO. B 8350-706
REV /
SCALE 4/1
SHEET 2 OF 4

CALICO F-101

A7

A7

REPLACEABLE PARTS

7.1 GENERAL

This section contains ordering information and complete list of replacable parts. Parts are listed by major assembly in alphanumeric order of their reference designators. Description, manufacturers' part number, manufacturers' code ident number (see Appendix A for list of manufacturers), and CALICO's stock number are indicated.

7.2 ORDERING INFORMATION

In order to provide our customers with prompt service on replacement parts, please provide the following information, when applicable, for each part ordered:

a) Model number and serial number of the instrument
b) CALICO part number of the sub-assembly where component is located
c) Component reference designator
d) Component description
e) Component manufacturer number and code ident
f) CALICO stock number

All replacement parts orders should be placed with CALIFORNIA INSTRUMENTS CORPORATION, San Diego, California.

CALICO CALIFORNIA INSTRUMENTS CORP. SAN DIEGO, CALIFORNIA | CODE IDENT 16067 | **PARTS LIST**

REF. DES.	MFG. NUMBER	DESCRIPTION	CODE IDENT	CALICO STOCK NUMBER	ITEM NO.
	~~8350-400-1~~	~~Digital Panel Meter Assy.~~	~~16067~~		~~1~~
					2
					3
A1	D8350-705-1	Master Board Assembly	16067		4
A2	C8350-700-1	Decade Board Assembly	16067		5
A3	C8350-701-1	Over Range Board Assembly	16067		6
A4	C8350-702-1	Polarity Board Assembly	16067		7
A5	C8350-703-1	Logic Board Assembly	16067		8
A6	C8350-704-1	Analog Board Assembly	16067		9
A7	B8350-706-1	Attenuator Board Assembly	16067		10
	B8350-211	Shunt Board Assembly	16067		11
~~A6~~	~~C8350-704-2~~	~~Analog Board Assembly~~	~~16067~~		~~12~~
					13
					14
	~~D8350-200-1~~	~~Enclosure~~	~~16067~~	~~1-42024~~	~~15~~
	~~C8350-201-7~~	~~Bracket~~	~~16067~~	~~1-42023~~	~~16~~
	B8350-202-7 *	Bezel	16067	1-42022	17
					18
	B8350-204-7	Polarizer	16067	1-41029	19
	B8350-208-7	Name Plate	16067	1-42019	20
	* M/F C7048	Bezel	74542		21
					22
					23
					24
	#4-40x½ LG	Screw, Pan HD.			25
	~~#4-40x3/16 LG~~	~~Screw, Flat HD.~~			~~26~~
	~~#4-40x5/16 LG~~	~~Screw, Pan HD.~~			~~27~~
					28
	8350-4				29
					30
	#4	Washer Internal Lock			31
					32
	#4-40	Nut, Plain			33
	WG-300	Grommet, Caterpillar	75987		34
	910	Cement			35

MODEL 8361 | CALICO P/N 8350-400 | ASSY R.D. /

TITLE DIGITAL PANEL METER | SHT 3 OF 3

CALICO	CALIFORNIA INSTRUMENTS CORP. SAN DIEGO, CALIFORNIA	CODE IDENT 16067	PARTS LIST

REF. DES.	MFG. NUMBER	DESCRIPTION	CODE IDENT	CALICO STOCK NUMBER	ITEM NO.
A1	8350-705-1	Master Board Assembly	16067		1
	8350-705-7	P.C. Board	16067	1-55025	2
					3
					4
A1C1	39D208G006GJ4	Capacitor 2000/6V	56289	6-10445	5
A1C2	39D208G006GJ4	Capacitor 2000/6V	56289	6-10445	6
A1C3	TE 1213	Capacitor 200/25V	56289	6-10446	7
A1C4	TE 1213	Capacitor 200/25V	56289	6-10446	8
A1C5	TVA 1508	Capacitor 20/250V	56289	6-10447	9
A1C6	WMF 251	Capacitor .01 µf	14655	6-10091	10
					11
A1CR1	SCE-2	Diode	14099	3-10082	12
A1CR2	SCE-2	Diode	14099	3-10082	13
A1CR3	SCE-2	Diode	14099	3-10082	14
A1CR4	SCE-2	Diode	14099	3-10082	15
A1CR5	SCE-2	Diode	14099	3-10082	16
A1CR6	SCE-2	Diode	14099	3-10082	17
A1CR7	IN5246A	Diode Zener	04713	3-10145	18
A1CR8	SCE-2	Diode	14099	3-10082	19
A1CR9	IN5246A	Diode Zener	04713	3-10145	20
A1CR10	SCE-2	Diode	14099	3-10082	21
A1CR11	SCE-6	Diode	14099	3-10078	22
A1CR12	SCE-6	Diode	14099	3-10078	23
A1CR13	SCE-6	Diode	14099	3-10078	24
A1CR14	SCE-6	Diode	14099	3-10078	25
					26
A1Q1	CIC 330	Transistor	16067	3-30008	27
A1Q2	CIC 718	Transistor	16067	3-30041	28
					29
A1R1	RC07GF202J	Resistor, 2K ¼ W	JEDEC	5-10059	30
A1R2	RC07GF202J	Resistor, 2K ¼ W	JEDEC	5-10059	31
A1R3	RC07GF204J	Resistor, 200K ¼ W	JEDEC	5-10107	32
A1R4	RC07GF153J	Resistor, 15K ¼ W	JEDEC	5-10080	33
A1R5	RC07GF153J	Resistor, 15K ¼ W	JEDEC	5-10080	34
A1R6	RC07GF153J	Resistor, 15K ¼ W	JEDEC	5-10080	35
A1R7	RC07GF153J	Resistor, 15K ¼ W	JEDEC	5-10080	36

MODEL 8361	CALICO P/N 8350-705	ASSY R.D.
TITLE MASTER BOARD ASSY	SHT 4 OF 5	A1

CALICO CALIFORNIA INSTRUMENTS CORP. SAN DIEGO, CALIFORNIA

CODE IDENT 16067

PARTS LIST

REF. DES.	MFG. NUMBER	DESCRIPTION	CODE IDENT	CALICO STOCK NUMBER	ITEM NO.
A1R8	RC07GF473J	Resistor, 47K $\frac{1}{4}$ W	JEDEC	5-10092	37
A1R9	RC07GF104J	Resistor, 100K $\frac{1}{4}$ W	JEDEC	5-10100	38
A1R10	3007P-1-203	Resistor, Var, 20K	80294	5-70078	39
A1R11	3007P-1-502	Resistor, Var 5K	80294	5-70077	40
					41
					42
A1T1	8350-010	Transformer	16067	7-10088	43
	1300-26	Spacer	71279	2-10157	44
	1300-10	Spacer	71279	2-10156	45
	B8350-212-7	Board Guide	16067	1-42057	46
	MC-6G	Digi-Klip	26364	2-41034	47
	B8350-209-7	Board Retainer	16067	1-10168	48
	B8350-207-7	Angle Bracket	16067	1-42020	49
	B8350-207-8	Angle Bracket	16067	1-42021	50
	2138-B	Pad-felt	23039	2-10158	51
					52
	#4-40X7/8 LG	Screw-Pan HD.			53
	#4	Washer-Split Lock			54
					55
					56
					57
	AWG 24	Buss Wire			58
	AWG 24	Teflon Sleeving			59
					60
					61
					62
					63
					64
					65
					66
					67
					68
					69
					70
					71
					72

MODEL 8361 CALICO P/N 8350-705 ASSY R.D. A1

TITLE MASTER BOARD ASSY SHT 5 OF 5

CALICO CALIFORNIA INSTRUMENTS CORP. SAN DIEGO, CALIFORNIA

CODE IDENT 16067

PARTS LIST

REF. DES.	MFG. NUMBER	DESCRIPTION	CODE IDENT	CALICO STOCK NUMBER	ITEM NO.
A2	8350-700-1	Decade Board Assembly	16067		1
	8350-700-7	P.C. Board	16067	1-55020	2
					3
					4
A2IC1	U6A995979X	Intergrated Circuit	07263	3-30115	5
A2IC2	U6B996079X	Intergrated Circuit	07263	3-30116	6
A2IC3	U5B995879X	Intergrated Circuit	07263	3-30114	7
					8
A2V1	B5750	Nixie Tube	83594	2-30031	9
					10
	AWG 24	Buss Wire			11
	AWG 24	Teflon Sleeving			12

MODEL 8361 CALICO P/N 8350-700 ASSY R.D. A2

TITLE DECADE BOARD ASSY SHT 4 OF 4

CALICO CALIFORNIA INSTRUMENTS CORP. SAN DIEGO, CALIFORNIA

CODE IDENT 16067

PARTS LIST

REF. DES.	MFG. NUMBER	DESCRIPTION	CODE IDENT	CALICO STOCK NUMBER	ITEM NO.
A3	8350-701-1	Over Range Board Assy.	16067		1
	8350-701-7	P.C. Board	16067	1-55021	2
					3
					4
A3DS1	A-261	Lamp	74276	2-41081	5
					6
A3IC1	MC 790P	Intergrated Circuit	04713	3-30113	7
A3IC2	MC 724P	Intergrated Circuit	04713	3-30111	8
A3IC3	MC 790P	Intergrated Circuit	04713	3-30113	9
					10
A3Q1	2N3440	Transistor	95303	3-30090	11
					12
					13
A3R1	RC07GF202J	Resistor, 2K $\frac{1}{4}$ W	JEDEC	5-10059	14
A3R2	RC07GF202J	Resistor, 2K $\frac{1}{4}$ W	JEDEC	5-10059	15
A3R3	RC07GF474J	Resistor, 470K $\frac{1}{4}$ W	JEDEC	5-10115	16
					17
	910	Cement			18
					19
					20

MODEL 8361 CALICO P/N 8350-701 ASSY R.D. A3

TITLE OVER RANGE BOARD ASSY SHT 4 OF 4

CALICO CALIFORNIA INSTRUMENTS CORP. SAN DIEGO, CALIFORNIA

CODE IDENT 16067

PARTS LIST

REF. DES.	MFG. NUMBER	DESCRIPTION	CODE IDENT	CALICO STOCK NUMBER	ITEM NO.
A4	8350-702-1	Polarity Board Assembly	16067		1
	8350-702-7	P.C. Board	16067	1-55022	2
					3
					4
A4DS1	B8350-012-7	Neon Light	16067	2-41082	5
					6
A4IC1	MC 724P	Intergrated Circuit	04713	3-30111	7
					8
A4Q1	2N3440	Transistor	95303	3-30090	9
					10
A4R1	RC07GF202J	Resistor, 2K $\frac{1}{4}$ W	JEDEC	5-10059	11
A4R2	RC07GF202J	Resistor, 2K $\frac{1}{4}$ W	JEDEC	5-10059	12
A4R3	RC07GF202J	Resistor, 2K $\frac{1}{4}$ W	JEDEC	5-10059	13
A4R4	RC07GF474J	Resistor, 470K $\frac{1}{4}$ W	JEDEC	5-10115	14
					15
					16
	RTV	Cement			17
	7715-15	Transipad	13103	3-30190	18
					19
A4DS1	Altermate Part:				20
	~~Use Part Number A1B, or A1C~~				21
	~~Lamp. Vender: Chicago~~				22
	Miniature Lamp Works.				23

MODEL 8361 CALICO P/N 8350-702 ASSY R.D. A4

TITLE POLARITY BOARD ASSY SHT 4 OF 4

CALICO CALIFORNIA INSTRUMENTS CORP. SAN DIEGO, CALIFORNIA

CODE IDENT 16067

PARTS LIST

REF. DES.	MFG. NUMBER	DESCRIPTION	CODE IDENT	CALICO STOCK NUMBER	ITEM NO.
A5	8350-703-1	Logic Board Assembly	16067		1
	8350-703-7	P.C. Board	16067	1-55023	2
					3
					4
A5C1	TE1090	Capacitor, 20µf 6V	56289	6-10444	5
A5C2	CM05C050K03	Capacitor, 5PF	04062	6-10483	6
A5C3	HY 310	Capacitor, .047µf	56289	6-10114	7
					8
A5IC1	MC 724P	Intergrated Circuit	04713	3-30111	9
A5IC2	MC 724P	Intergrated Circuit	04713	3-30111	10
A5IC3	MC 789P	Intergrated Circuit	04713	3-30112	11
A5IC4	MC 724P	Intergrated Circuit	04713	3-30111	12
A5IC5	U5B995879X	Intergrated Circuit	07263	3-30114	13
					14
A5Q1	TIS 43	Transistor	01295	3-30131	15
					16
A5R1	RC07GF183J	Resistor, 18K $\frac{1}{4}$ W	JEDEC	5-10082	17
A5R2	RC07GF102J	Resistor, 1K $\frac{1}{4}$ W	JEDEC	5-10053	18
A5R3	RC07GF202J	Resistor, 2K $\frac{1}{4}$ W	JEDEC	5-10059	19
A5R4	RC07GF104J	Resistor, 100K $\frac{1}{4}$ W	JEDEC	5-10100	20
A5R5	RC07GF104J	Resistor, 100K $\frac{1}{4}$ W	JEDEC	5-10100	21
A5R6	RC07GF202J	Resistor, 2K $\frac{1}{4}$ W	JEDEC	5-10059	22
A5R7	RC07GF102J	Resistor, 1K $\frac{1}{4}$ W	JEDEC	5-10053	23
A5R8	RC07GF102J	Resistor, 1K $\frac{1}{4}$ W	JEDEC	5-10053	24
A5R9	RC07GF202J	Resistor, 2K $\frac{1}{4}$ W	JEDEC	5-10059	25
					26
A5Y1	CR 18 A/L	Crystal, 2MHz	13454	3-30124	27
					28
	#24 GA	Buss Wire			29
					30
	2000B-1	Terminal	88245	2-50099	31

MODEL 8361 CALICO P N 8350-703 ASSY R.D. A5

TITLE LOGIC BOARD ASSY SHT 4 OF 4

CALICO CALIFORNIA INSTRUMENTS CORP. SAN DIEGO, CALIFORNIA | CODE IDENT 16067 | PARTS LIST

REF. DES.	MFG. NUMBER	DESCRIPTION	CODE IDENT	CALICO STOCK NUMBER	ITEM NO.
A6	8350-704-1	Analog Board Assembly	16067		1
	8350-704-7	P.C. Board	16067	1-55024	2
		Eyelet See Sht. 3			3
					4
A6C1	CK 502	Capacitor .005μf	71590	6-10078	5
A6C2	CK06BX223K	Capacitor .02μf	14655	6-10454	6
A6C3	CD10F 220J	Capacitor 220PF	04062	6-10036	7
A6C4	CK06BX103K	Capacitor .01μF	14655	6-10490	8
A6C5	CK06BX223K	Capacitor .02μf	14655	6-10454	9
A6C6	CIC 101	Capacitor	16067	6-10491	10
					11
A6C7	CK06BX473K	Capacitor .047μF	14655	6-10489	12
A6C8	CK06BX223K	Capacitor .02μf	14655	6-10454	13
A6C9	CK06BX223K	Capacitor .02μf	14655	6-10454	14
					15
					16
A6CR1	IN914	Diode	JEDEC	3-10118	17
A6CR2	IN914	Diode	JEDEC	3-10118	18
A6CR3	IN5227	Diode Zener	04719	3-10136	19
A6CR4	IN914	Diode	JEDEC	3-10118	20
A6CR5	IN914	Diode	JEDEC	3-10118	21
A6CR6	CIC 704	Diode Zener	16067	3-10142	22
					23
A6CR7	IN914	Diode	JEDEC	3-10118	24
A6CR8	IN914	Diode	JEDEC	3-10118	25
					26
					27
A6IC1	811 CE	Intergrated Circuit	15818	3-30128	28
A6IC2	CIC-200-1	Intergrated Circuit	16067	3-30134	29
A6IC3	811 CE	Intergrated Circuit	15818	3-30128	30
A6IC4	811 CE	Intergrated Circuit	15818	3-30128	31
					32
					33
A6Q1	CIC 336A	Transistor	16067	3-30015	34
A6Q2	CIC 336A	Transistor	16067	3-30015	35
A6Q3	2N3638	Transistor	07263	3-30094	36

MODEL 8361 | CALICO P N 8350-704 | ASSY RD. A6

TITLE ANALOG BOARD ASSY | SHT 4 OF 5

CALICO CALIFORNIA INSTRUMENTS CORP. SAN DIEGO, CALIFORNIA | CODE IDENT 16067 | PARTS LIST

REF. DES.	MFG. NUMBER	DESCRIPTION	CODE IDENT	CALICO STOCK NUMBER	ITEM NO.
A6R1	RC07GF105J	Resistor 1M $\frac{1}{4}$ W	JEDEC	5-10123	37
~~A6R2~~	~~RC07GF104J~~	~~Resistor 100K $\frac{1}{4}$ W~~	~~JEDEC~~	~~5-10100~~	~~38~~
A6R3	RC07GF152J	Resistor 1.5K $\frac{1}{4}$ W	JEDEC	5-10057	39
A6R4	RC07GF106J	Resistor 10M $\frac{1}{4}$ W	JEDEC	5-10135	40
A6R5	RC07GF106J	Resistor 10M $\frac{1}{4}$ W	JEDEC	5-10135	41
A6R6	RC07GF105J	Resistor 1M $\frac{1}{4}$ W	JEDEC	5-10123	42
A6R7	RC07GF102J	Resistor 1K $\frac{1}{4}$ W	JEDEC	5-10053	43
A6R8	RC07GF106J	Resistor 10M $\frac{1}{4}$ W	JEDEC	5-10135	44
A6R9	RC07GF272J	Resistor 2.7K $\frac{1}{4}$ W	JEDEC	5-10062	45
A6R10	3007P-1-203	Resistor Vairable 20K	86294	5-70078	46
A6R11	RC07GF106J	Resistor 10M $\frac{1}{4}$ W	JEDEC	5-10135	47
A6R12	RC07GF244J	Resistor 240K $\frac{1}{4}$ W	JEDEC	5-10109	48
A6R13	RC07GF203J	Resistor 20K $\frac{1}{4}$ W	JEDEC	5-10083	49
A6R14	RC07GF244J	Resistor 240K $\frac{1}{4}$ W	JEDEC	5-10109	50
A6R15	RC07GF101J	Resistor 100Ω $\frac{1}{4}$ W	JEDEC	5-10029	51
A6R16	RC07GF103J	Resistor 10K $\frac{1}{4}$ W	JEDEC	5-10076	52
A6R17A	RN60C	Resistor TBD	JEDEC	5-6	53
A6R17B	RN60D	Resistor TBD 1%	JEDEC	5-6	54
A6R18	RC07GF244J	Resistor 240K $\frac{1}{4}$ W	JEDEC	5-10109	55
A6R19	RC07GF103J	Resistor 10K $\frac{1}{4}$ W	JEDEC	5-10076	56
A6R20	RN60D (TBD)	Resistor TBD	JEDEC	5-6	57
A6R21	RC07GF244J	Resistor 240K $\frac{1}{4}$ W	JEDEC	5-10109	58
A6R22	RN 60D	Resistor t.b.d. 1%	JEDEC		59
					60
A6R23A	3300-A-014-42	Resistor 599.7K .05%	16067	5-80072	61
A6R23B	RN60D5303F	Resistor 530K 1%	JEDEC	5-60162	62
A6R24	RC07GF154J	Resistor 150K $\frac{1}{4}$ W	JEDEC	5-10104	63
A6R25	RC07GF103J	Resistor 10K $\frac{1}{4}$ W	JEDEC	5-10076	64
A6R26	RC07GF103J	Resistor 10K $\frac{1}{4}$ W	JEDEC	5-10076	65
A6R27	RC07GF103J	Resistor 10K $\frac{1}{4}$ W	JEDEC	5-10076	66
A6R28	RC07GF100J	Resistor 10Ω 1/4 W	JEDEC	5-10005	67
	AWG 24	Buss Wire			68
	AWG 24	Teflon Sleeving			69

MODEL 8361 | CALICO P/N 8350-704 | ASSY R.D. A6

TITLE ANALOG BOARD ASSY. | SHT 5 OF 5

CALICO CALIFORNIA INSTRUMENTS CORP. SAN DIEGO, CALIFORNIA

CODE IDENT 16067

PARTS LIST

REF. DES.	MFG. NUMBER	DESCRIPTION	CODE IDENT	CALICO STOCK NUMBER	ITEM NO.
A7	8350-706-1	Attenuator P.C. Bd. Assy.	16067	—	1
	8350-706-7	P.C. Board	16067	1-55026	2
					3
					4
A7R1	RN60D1004F	Resistor, 1M 1%	JEDEC	5-60176	5
A7R2	RN60D1004F	Resistor, 1M 1%	JEDEC	5-60176	6
A7R3	RN60D1004F	Resistor, 1M 1%	JEDEC	5-60176	7
A7R4	RN60D1004F	Resistor, 1M 1%	JEDEC	5-60176	8
A7R5	RN60D1004F	Resistor, 1M 1%	JEDEC	5-60176	9
A7R6	RN60D1004F	Resistor, 1M 1%	JEDEC	5-60176	10
A7R7	RN60D1004F	Resistor, 1M 1%	JEDEC	5-60176	11
A7R8	RN60D1004F	Resistor, 1M 1%	JEDEC	5-60176	12
A7R9	RN60D1004F	Resistor, 1M 1%	JEDEC	5-60176	13
A7R10	RN60D1004F	Resistor, 1M 1%	JEDEC	5-60176	14

MODEL 8361 CALICO P/N 8350-706 ASSY R.D. A7

TITLE ATTENUATOR BOARD ASSY SHT 4 OF 4

The following code numbers are from the Federal Supply Code for Manufacturers Cataloging Handbook H4-1 and its latest supplement. Alphabetical codes have been arbitrarily assigned to suppliers not appearing in the H4 Handbook.

0000A	ElectriCord	Westfield, Pennsylvania
0000B	Tech. Prod. Sales	Sorrento Valley, California
0000C	Jackson Bros.	Waddon, Surrey, England
0000D	Chicago Std. Transformer Co.	Chicago, Illinois
0000E	Delbert Blinn	Pomona, California
0000F	Colvern	Santa Monica, California
0000G	Electra/Midland	San Diego, California
0000H	Mial of Italy c/o Q.C. Components	Los Angeles, California
00141	Pic Eng.	New York, New York
00544	Metal Cal	Inglewood, California
00656	Aero Vox	New Bedford, Massachusetts
00779	AMP, Inc.	Harrisburg, Pennsylvania
00853	Sangamo	Marion, Illinois
00866	Goe Eng.	City of Industry, California
01121	Allen Bradley	Milwaukee, Wisconsin
01255	Litton Industries	Beverly Hills, California
01281	TRW Semiconductors, Inc.	Lawndale, California
01295	Texas Instruments	Dallas, Texas
02335	Fairchild	Hicksville, LI, New York
02660	Amphenol	Broadview, Illinois
03507	General Electric	Syracuse, New York
03508	General Electric	Syracuse, New York
03516	General Electric	Somersworth, New Hampshire
03797	Eldema	El Monte, California
03911	Clairex	New York, New York
04009	Arrow-Hart	Hartford, Connecticut
04062	Elmenco	New York, New York
04713	Motorola	Phoenix, Arizona
04963	3-M	St. Paul, Minnesota
05276	Pomona	El Monte, California
05397	Kemet	Cleveland, Ohio
05820	Wakefield Engineering	Wakefield, Massachusetts
06184	Conelco	San Bernadino, California
06223	Kooltronics	Princeton, New Jersey
06229	Electrovert, Inc.	Mt. Vernon, New York
06514	Stantron (Wyco Metal Products)	North Hollywood, California
06540	Amatom Elect. Hardware	New Rochelle, New York
07088	Kelvin Elect. Co.	Van Nuys, California
07256	Silicon Trans. Corp.	Garden City, New York
07263	Fairchild	Mt. View, California
07387	Bircher Corporation	Los Angeles, California
07556	Unitrack (Calabro Plastics)	Upper Darby, Pennsylvania
07716	IRC	Burlington, Iowa
08065	Accurate Rubber	San Diego, California
08718	Cannon	Phoenix, Arizona
08730	Vermaline Products	Franklin Lakes, New Jersey
09026	Babcock	Costa Mesa, California
09145	Atohm	Burbank, California
11432	Diamond Perforated Metals	Gardena, California
12143	Bendix Components	Santa Ana, California
12405	Hysol	El Monte, California
12406	Elpac	Fullerton, California
12463	Amtronics Mfg., Inc.	Omaha, Nebraska
12697	Clarostat	Dover, New Hampshire
13103	Thermalloy Co.	Dallas, Texas
13454	Texas Crystals	River Grove, Illinois
14099	Semtech Corp.	Newbury Park, California
14655	Cornell-Dubilier Elect. Corp.	Newark, New Jersey
14752	ElectroCube	So. Pasadena, California
15112	Electra Scientific	Fullerton, California
15801	Fenwal	Framingham, Massachusetts
15818	Amelco	Mt. View, California
15909	Daven	Livingston, New Jersey
15912	Digital Sensors, Inc.	Los Angeles, California
16067	California Instruments Corporation	San Diego, California
16758	Delco	Kokomo, Indiana
16902	Simpson	Escondido, California
17838	California General Corp. (Mektron)	Chula Vista, California
18121	Wilshier Foam Prod.	Gardena, California
18702	Ducommun Metals	Los Angeles, California
18722	RCA	Mountaintop, Pennsylvania
19080	The Robinson Company	Hawthorne, California
19781	Potter	Anaheim, California
21604	Buckeye Stamping Company	Columbus, Ohio
22599	Elastic Stop Nut	Van Nuys, California
23050	Product Components Corp.	Hudson, New York
23936	Pamotor	San Francisco, California
24931	Specialty Conn. Co., Inc.	Indianapolis, Indiana
25084	Victoreen	Oaklawn, Illinois
26533	Zero	Burbank, California
26528	Lamcor	Anahiem, California
27556	IMB	Santa Fe Springs, California
28520	Heyman Mfg. Co. (Heyco)	Kenilworth, New Jersey
30086	ITE	Philadelphia, Pennsylvania
30817	Instrument Specialties Company	Little Falls, New Jersey
42190	Muter Company	Chicago, Illinois
44655	Ohmite Mfg. Company	Skokie, Illinois
45722	Parker-Kalon	Clifton, New Jersey
46384	Penn. Eng.	Doylestown, Pennsylvania
56289	Sprague	North Adams, Massachusetts
58474	Superior Elect. Co.	Bristol, Connecticut
59730	Thomas and Betts Co.	Elizabeth, New Jersey
60741	Triplett	Bluffton, Ohio
63743	Ward Leonard	Mount Vernon, New York
70903	Belden	Chicago, Illinois
71002	Birnbach Radio	New York, New York
71279	Cambion	Cambridge, Massachusetts
71400	Bussman	St. Louis, Missouri
71450	CTS	Elkhart, Indiana
71468	ITT Cannon	Los Angeles, California
71590	Centralab	Milwaukee, Wisconsin
71785	Cinch-Jones	Chicago, Illinois
72259	Nytronics	Berkley Hieghts, New Jersey
72619	Dialco	Brooklyn, New York
72982	Erie Techological Prod.	Erie, Pennsylvania
73138	Beckman	Fullerton, California
73559	Carling Elec., Inc.	West Hartford, Connecticut
73734	Federal Screw Products	Chicago, Illinois
73899	JFD	Brooklyn, New York
73949	Guardian	Chicago, Illinois
73597	Groov-Pin Corporation	Ridgefield, New Jersey
74193	Heinemann	Trenton, New Jersey
74276	Signalite, Incorporated	Neptune, New Jersey
74542	Hoyt	Penacook, New Hampshire
74545	Hubbel	Bridgeport, Connecticut
74970	E.F. Johnson	Waseca, Minnesota
75382	Kulka	Mount Vernon, New York
75915	Littlefuse	Des Plaines, Illinois
75987	Weckesser Co.	Chicago, Illinois
76055	Mallory	Frankfort, Indiana
76348	Miller Products Co., Inc.	New York, New York
76493	J.W. Miller	Los Angeles, California
76854	Oak Mfg. Company	Crystal Lake, Illinois
77342	Potter-Brumfield	Chicago, Illinois
78290	Struthers-Dunn	Pitman, New Jersey
78488	Stackpole	St. Mary's, Pennsylvania
78526	Stanwyck Winding Co.	Newburg, New York
78553	Tinnerman Products	Cleveland, Ohio
78947	Ucinite Co.	Newtonville, Massachusetts
79130	John Manville Prod. Corp.	Chicago, Illinois
79727	Continental-Wirt	Philadelphia, Pennsylvania
79963	Zierick Mfg. Corp.	New Rochelle, New York
80112	G.C. Electronics	Los Angeles, California
80294	Bourns	Riverside, California
80368	Sylvania	New York, New York
81073	Grayhill	La Grange, Illinois
81095	Triad	Chicago, Illinois
81312	Winchester	Norwalk, Connecticut
82389	Switchcraft	Chicago, Illinois
82877	Rotron	woodstock, New York
83330	H.H. Smith	Brooklyn, New York
83594	Burroughs	Plainfield, New Jersey
83701	Elec. Devices, Inc.	Yonkers, New York
84171	Arco	Great Neck, New York
86684	RCA	Harrison, New Jersey
87034	Marco-Oak	Anaheim, California
88026	Cutler-Hammer	Los Angeles, California
88245	UseCo	Van Nuys, California
89665	UTC	Venice, California
90201	Mallory	Indianapolis, Indiana
91637	Dale	Columbus, Nebraska
91662	Elco	Willow Grove, Pennsylvania
91812	Janco Corporation	Burbank, California
91833	Keystone	New York, New York
91929	Micro Switch	Chicago, Illinois
92194	Alpha Wire	Chicago, Illinois
92219	Waldom	Chicago, Illinois
93332	Sylvania	Waburn, Massachusetts
94222	Southco	Chester, Pennsylvania
95416	Alco	Lawrence, Massachusetts
95303	RCA	Cincinnati, Ohio
96682	Genisco	Compton, California
98159	Rubber Teck, Inc.	Gardena, California
98278	Micro Dot (Lerco)	So. Pasadena, California
98978	IERC	Burbank, California
99515	Electron Products	Pasadena, California
99517	Vasco	El Monte, California
99800	Delevan Elect. Corp.	Aurora, New York

ONE YEAR WARRANTY

CALIFORNIA INSTRUMENTS CORPORATION warrants each instrument manufactured by them to be free from defects in material and workmanship for a period of one year from the date of shipment to the original purchaser. Excepted from this warranty are tubes, fuses, and batteries which carry the warranty of their original manufacturer where applicable. CALIFORNIA INSTRUMENTS CORPORATION will service, replace, or adjust any defective part or parts, free of charge, when the instrument is returned to the Company freight prepaid, and when examination reveals that the fault has not occurred because of misuse or abnormal conditions of operation. Equipment repaired beyond the effective date of warranty or when abnormal usage has occurred will be charged at applicable rates. CALICO will submit an estimate for such charges before commencing repair if so requested.

PROCEDURE FOR SERVICE

If a fault develops, notify CALICO or its local representative, giving full details of the difficulty, and including the model number and serial number. On receipt of this information, service data or shipping instructions will be furnished. If shipment is indicated, forward the instrument, freight prepaid, to the authorized repair station indicated in the instruction. If requested, an estimate of the charges will be made before the work begins, provided the instrument is not covered by the warranty.

DAMAGE IN TRANSIT

The instrument should be tested as soon as it is received. If it fails to operate properly, or is damaged in any way, a claim should be filed with the carrier. A full report of the damage should be obtained by the claim agent, and this report should be forwarded to us. CALICO will advise the disposition to be made of the equipment and arrange for repair or replacement. Please include model number and serial number when referring to the instrument.

www.manualsplus.com
1009926